About Animatics

Thank you for using or considering the use of our innovative automation products. Headquartered in California and with offices around the world, Animatics Corporation has a unique approach to motion and machine control that can enable you to leapfrog your global competition. Before you dig into this catalog, we want to bring your attention to two critical areas where Animatics is the world leader:

1. Animatics offers the most highly integrated automation solutions in the industry. Starting with the SmartMotor, the world's first fully-integrated Servo System, and extending through a large variety of I/O, machine control and actuator products, Animatics offers total solutions with a much smaller footprint and a lower cost, with a simplicity that reduces your machine development and build time – getting you to market faster.

2. With offices in Tokyo, California, New York, the United Kingdom and Continental Europe, the sun never sets on Animatics while we directly support key customers along with a global network of factory trained Automation Solution Providers; independent companies in your backyard ready to supply and support your Animatics products through the long-haul.

This catalog contains all "Class 4 – PLS2" SmartMotors™ and touches on Animatics' Actuator line. More information on the actuators can be found in a separate catalog and on the Animatics website. All of the SmartMotors™ in this catalog have the latest "PLS2" feature set and are recommended for new designs. Earlier SmartMotor versions will continue to be sold and supported, but the best functionality and value will be found in the latest versions. Every effort has been made toward backward compatibility and little effort is required to adjust to the newer versions.

Future products will be released as "Classes" with each class optimized for different markets, price points and applications exploiting an even greater variety of network protocols, industrial I/O capabilities and environmental sealing options.

Thank you again and welcome to Animatics,
"*Defining the future of Motion Control™*".

ANIMATICS®

Defining the Future of Motion Control

Notice: All SmartMotors™, Actuator and Product specifications are subject to change without notice.

- We define the future of motion control by innovation, invention, and a dedication to the highest standards of professionalism and quality in everything we do and in every product that we make.
- We invite quality firms to ally with us and to participate in our inventions and innovations for the benefit of the companies that need and use our advanced technology and products.
- We invite our customers and users to join with us in the joint development of custom products and systems using our technology.
- We commit to providing a fair workplace for our employees. We subscribe to the principle of being a good corporate citizen, a good neighbor, and a protector of our environment.

Contents

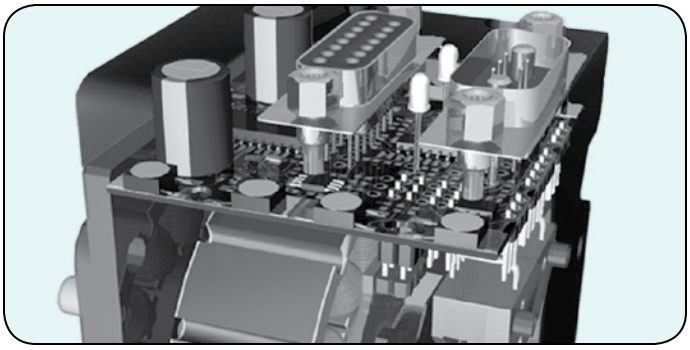

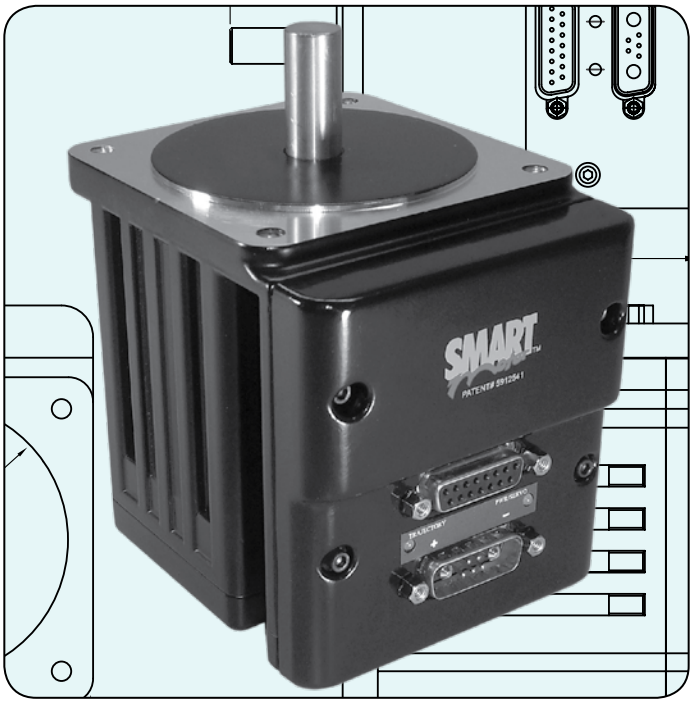

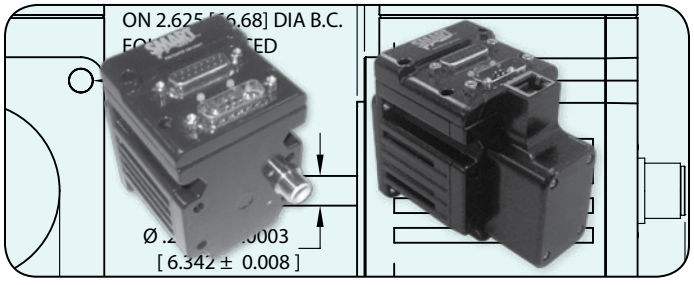

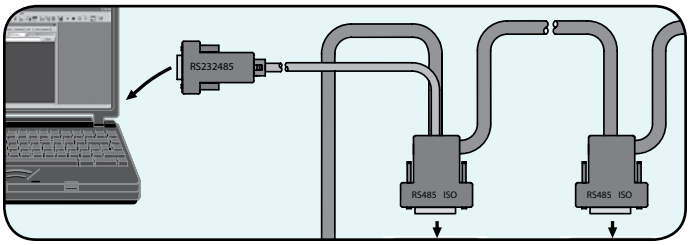

The Animatics Overview

4 Defining the Future of Motion Control
4 Animatics Institute
6 Total Benefits of Integrated Motion Control
8 SmartMotor Advantage
10 Dual Port Master Controller
11 SmartMotor Modes of Operation
12 Understanding Part Numbers
13 OEM Dynamics Actuators

Motor Specifications

14 Introduction to Motor Data
15 Understanding Animatics Torque Curves
16 Understanding Power Curves
17 Sizing within Proper Limits
18 SM1720D-PLS2
20 SM2316D-PLS2
22 SM2316DT-PLS2
24 SM2337D-PLS2
26 SM2337DT-PLS2
28 SM2320D-PLS2
30 SM2330D-PLS2
32 SM2340D-PLS2
34 SM3416D-PLS2
36 SM3416DT-PLS2
38 SM3420D-PLS2
40 SM3430D-PLS2
42 SM3440D-PLS2
44 SM3450D-PLS2

FieldBus Protocol

46 FieldBus Protocol Options
CANopen, DeviceNet, ProfiBus, Ethernet
48 FieldBus Protocol CAD Drawings

Brake Options

53 Introduction to Brake Options
54 Brake Option CAD Drawings

Connectivity

61 Introduction to Connectivity
62 SmartMotor Connection Map
64 Power & Communication Cables
71 Communications Adapters
72 I/O Cables
74 New User Development Kits & Connectors

Contents

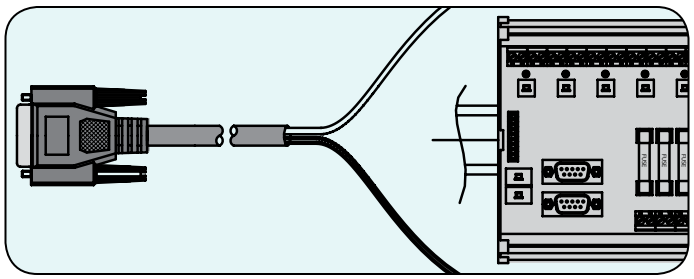

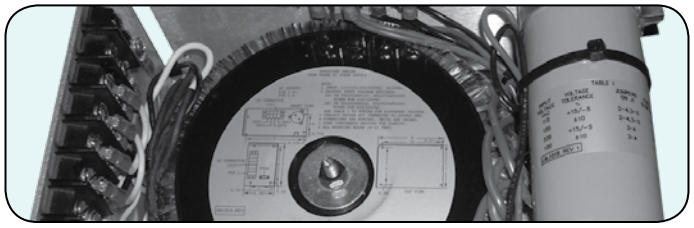

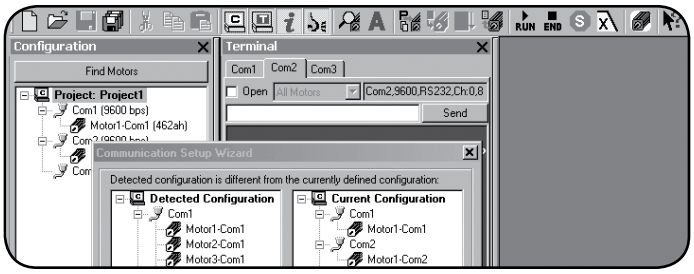

Notice: All SmartMotors™, Actuator and Product specifications are subject to change without notice.

Peripherals

75 Introduction to Peripherals
76 I/O Adapters
77 Motor Breakout Board
78 Serial Fan-Out Board
79 Expanded I/O and AniLink™
82 Demonstration, Testing & Development

Power Supplies and Shunts

84 How to Choose Power Supplies
85 Open Frame Linear Unregulated DC Power Supplies
86 Enclosed Switch Mode DC Power Supply
90 Enclosed DC Power Supplies
91 Shunts

Gearheads

94 Introduction to Gearheads
96 High Performance Planetary Gearheads
102 OEM Series Planetary Gearheads
108 Right Angle Planetary Gearheads

Software

111 Introduction to Software
112 SMI™ ▪ SmartMotor Interface™
114 Smart Select Interface
115 SMIEngine
116 SMNC™ ▪ SmartMotor Numeric Control
118 Jen CNC™

Appendix

120 Applications
124 SmartMotor Success Checklist
125 Controls, Warnings & Cautions
127 FAQ
130 Application Sizing Equations
132 Motion Glossary
135 Controller Code Execution Overview
136 SmartMotor™ Command Set Overview
140 Conformity Statement
141 Animatics Warranty
142 Index

The Benefits of Fully Integrated Motion Control

Our innovative approach to motion and machine control provides you the opportunity to change the rules of the game against your global competition by incorporating the simplicity and ease of use of the patented Animatics technology along with the highest power density integrated solution on the market. This simplicity and ease results in reduced system costs, greater field reliability, and reduced machine development and build time. Let our global network of factory-trained channel partners show you how.

The pioneer and recognized global leader of truly integrated motion control, the Animatics SmartMotor™ is a complete, compact, and user-friendly integrated motion control system featuring a brushless DC servo motor, motion controller, encoder and amplifier and is just one of the innovative products we design and produce.

Our line of fully integrated motion control products feature the ability to perform multi-axis motion, along with standard network bus capabilities of RS-232, RS-485, and ProfiBus, optional DeviceNet™, CANopen, and Ethernet fieldbus protocol, and highly flexible on-board and expandable I/O. Any SmartMotor™ can control an entire machine. Frame sizes range from standard NEMA 17 to NEMA 34 with speeds in excess of 10,000 RPM.

Available Software

SmartMotor™ Interface (SMI) is your window to the SmartMotor™ and it is available free-of-charge. It is Microsoft Windows compatible, and together with a desktop or laptop computer equipped with an RS-232 port, you have everything you need to converse with anywhere from 1 to 100 SmartMotors.™ Smart Select Interface™ (SSI) is a point-and-click configuration tool for programming SmartMotors™ for various pre-set motion profiles.

For a turnkey solution, JenCNC is a multi-axis, G-Code compatible contouring software package designed exclusively to run Animatics SmartMotors™. JenCNC is a full-featured 3-D CNC package combining the capability of CAD/CAM and motion control software with a unique graphical user interface for controlling two to four SmartMotors™ in true 3-D coordinated motion.

Animatics.com Web Site

Download software, check for the latest product information and updates, view literature and product manuals, get technical support, and locate your nearest representative on Animatics' user friendly site.

What's New

This catalog features the latest Class 4 PLS2 generation SmartMotors, providing up to 30% higher performance, higher resolution encoders, interrupt-driven fault handling, and other improvements, all at a lower cost.

Animatics Institute

Learn essential product, application, and game-changing machine building strategies at the Animatics company headquarters in Santa Clara, CA.

Available to a wide variety of customers and potential customers of our innovative rotary and linear solutions, this comprehensive training culminates in hands-on machine building lessons.

Unparalleled Customer Support

Customer support is a key area where Animatics separates itself from the pack. We offer products at a cost you would think could only come without support, and yet we have a global network of factory trained support engineers dedicated to keeping you productive.

This support network is two-layer. It starts with a direct Animatics office in every major market and time zone, and continues with a second layer of factory-trained engineers employed by our distributors and automation solutions providers residing, most likely, in your own backyard.

Our global support network is not just for emergency response. It is also very useful for training and installation assistance. The absolute best thing our network of engineering support can do for you, is help you to reexamine your machine design with an eye for leveraging the unique features of our integrated motion systems. Our knowledgeable and helpful global support team can show you how to use the features you are getting in the SmartMotor to eliminate PLCs, I/O blocks, extra cabling and cabinet space. They can show you how to approach your design so any part of the machine is serviceable anywhere, any time, by anyone with a screw driver. Leverage this design approach and learn how your customer can enjoy effectively ZERO downtime.

Commitment to the Environment & Sustainability

Animatics believes in being a responsible caretaker of our natural environment and strives to conserve and protect our natural resources. This principal manifests itself most directly in our product development and applications. We not only supply RoHS compliant products, the SmartMotor technology itself offers the lowest thermal heat up of any conventional or integrated package on the market, eliminating the need for additional cooling fans or additional material for heat sinks. SmartMotors let our customers design more compact multi-axis machines and end use products, reducing overall power consumption and reducing waste through optimized material usage, all while maximizing machine efficiency and throughput.

CE RoHS COMPLIANT ODVA UL

CANopen Ethernet DeviceNet PROFIBUS

Animatics Institute

Training for the Animatics SmartMotors™ is conducted by the Animatics Institute, which offers a variety of training programs and seminars for Automation Solution Providers (ASPs), Consultants, Distributors, Engineers, Machine Builders, OEMs, System Integrators, and Users of Animatics rotary and linear products and systems. The training programs include:

- Application solutions that lower costs, improve reliability and speed your time to market. Covers a variety of machine types and systems as well as a variety of markets. Opportunities to do machine design in real time at our headquarters.
- Basic principles of machine and system economics.
- Economics of machine and system design including comparative analysis. Time-to-Market values and more. The key to winning in the marketplace.
- Essential information about the SmartMotor™ and how it works including field bus options. Introduction to programming, avoiding common problems, and trouble-shooting.
- Master/Slave solutions: when to use them and when to avoid them.
- PLC-free systems.
- Sales and marketing strategies for Smart products and systems.
- SmartTechnologies ™ and how to get the most out of them.

Certificates are awarded upon satisfactory completion of courses. Programs cover more than one topic and typically last five days with opportunities for 2-week sessions.

Call 408.748.8721 and ask for Sales for additional information.

The Complexities of a Conventional, Complicated Servo System.....

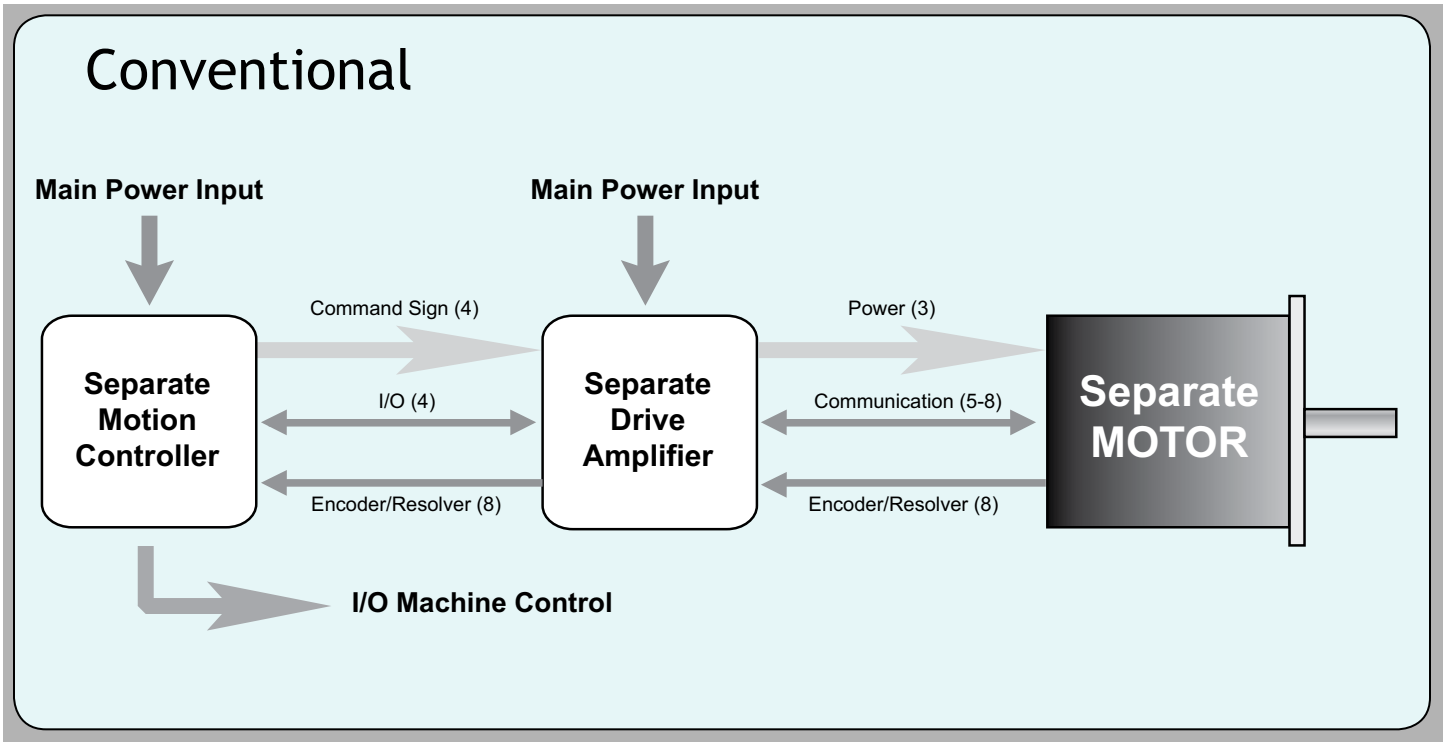

Conventional Design

High Total Cost of Ownership
More parts, more cabling with larger control cabinets and more assembly labor

Greater Risk of Field Failures Due to Increased System Complexity
Cabling between each unit and having separate components gives way to increased chance of failure

Lower Noise Immunity
Exposed control and feedback lines

Slow Time-to-Market
Additional parts to specify, validate, and purchase

Costly Field Service and Difficulty of Troubleshooting
Complex control/cabinets and cabling runs

The Simplicity and Ease of Use of the Animatics SmartMotor™

SmartMotor™

Main Power Input

A System of Components in single package with integrated motion controller, amplifier, and feedback encoder packaged with a high quality brushless DC servo motor.

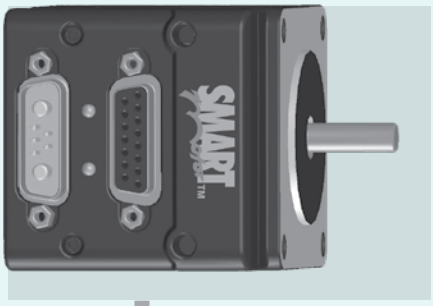

I/O Machine Control

SmartMotor™ Design

Reduced System Costs

A quarter the parts of traditional servo systems and smaller control cabinet sizing through cable elimination

Faster Time-to-Market Through Shorter Development Cycle

Fewer components to specify and source and overall system simplification

Greater Reliability

Fewer parts means less risk of field failures, especially due to cable elimination

Eliminate Costly Field Service

Ease of troubleshooting due to simplicity of design

Animatics Offers the most Thermally Efficient Integrated Solution on the Market

Why Risk Your Machine on Integrated Servo Motors Built to Lower Standards?

Not all integrated servo motor manufacturers share Animatics' conservative approach to servo motor design, construction, and testing – which assures consistent and reliable operation. Following is a side-by-side comparison with a competing integrated servo motor manufacturer:

Critical Features	Animatics Offering	Brand X	Animatics Advantage
System Operating Temperature Thermal Limit	85° C. (at a rise from 25° C. ambient)	40° C. (at a rise from 20° C. ambient)	Compact, efficient design offers wide range of application possibilities and worry-free operation. Competitive offering requires oversized heat sinks for narrow range of operation.
Torque Curves Based on the Following Ambient Temperature	25° C.	20° C.	Animatics motors deliver 8% more torque at 20° C. ambient. Brand X motor will have 25% less torque at 25° C. ambient.
Allowable Temperature Rise to Thermal Limit of Motor	60° C.	20° C.	Animatics offers flexibility and increased safety factor for ambient temperature variation.
Percentage of Torque Remaining at 40° C. Ambient	Greater than 50%	Zero	Animatics servo motors provide you the best assurance of dependable performance in your application.
De-Rated torque Curves Guarantee Performance for every Motor Delivered	Yes	No	Animatics tests to a more stringent, "worst case" standard, so all motors are guaranteed to perform at the listed torque curves. Brand X tests to a less stringent standard, putting your application at risk from potential motor manufacturing deviations. With Animatics, what you see is what you get.

Perspective on Room Temperature:

Brand X torque ratings are based on a room temperature of 20 Deg. C. If the ambient room temperature is actually 25 Degrees C., Brand X can only increase by 15 more degrees before tripping off line on over-temperature whereas SmartMotors can still rise 60 Degrees. This means the Smartmotors will have 70% more thermal headroom or 70% more torque available for the same base torque comparison.

Unparalleled Power Density

Shown below is a scaled comparison of an SM2316DT-PLS2 and a competitive integrated solution.

The SM2316DT-PLS2 has a continuous output power of ~200Watts at 3800RPM. The competitive integrated solution is rated at 75Watts at 3000RPM.
This shows a stark contrast to the compactness and efficiency of the Animatics SmartMotor technology.

For any given servo drive amplifier, with higher current demands, more heat will be generated.
SmartMotors have the lowest thermal heat up of any conventional or integrated package on the market. Less surface area is required to dissipate heat resulting in a more compact design. No fans, no large heat sinks! Multi-axis machines become more compact. Power consumption is reduced as well resulting in lower operating cost.

Motors are shown to scale with each other

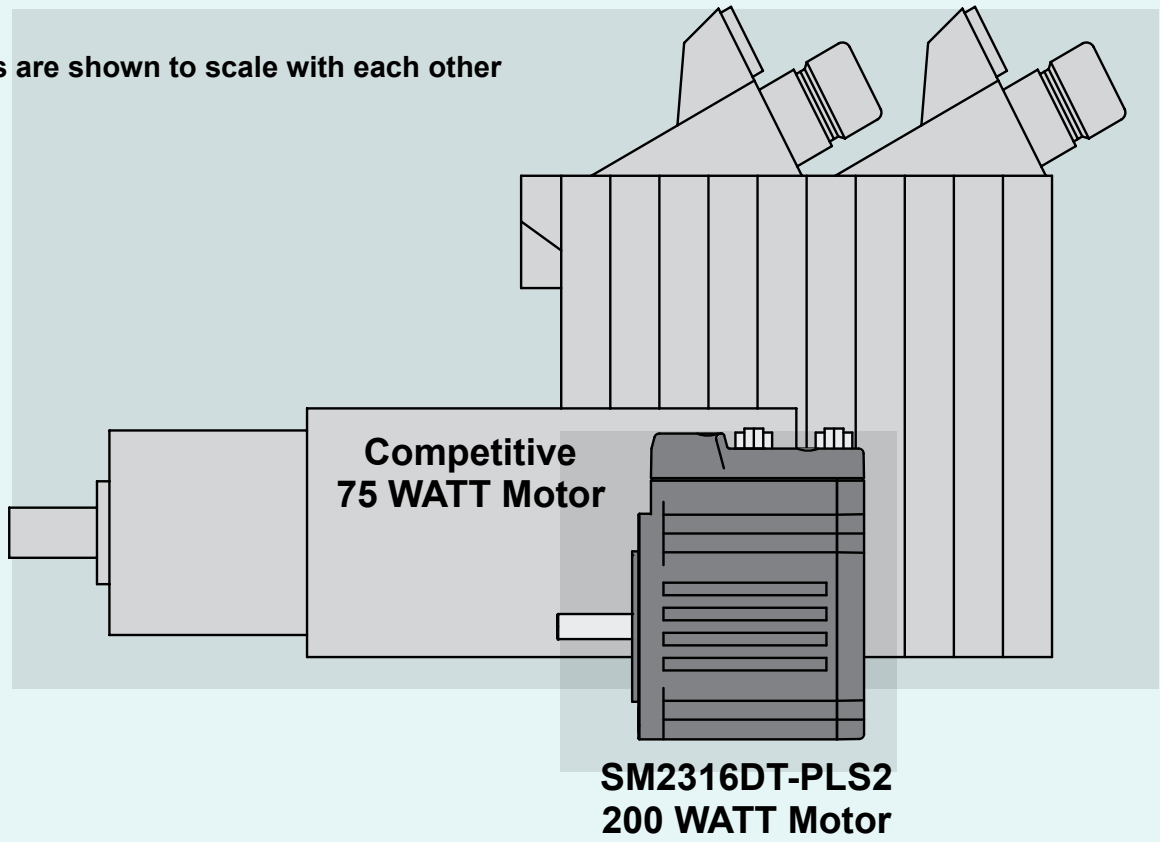

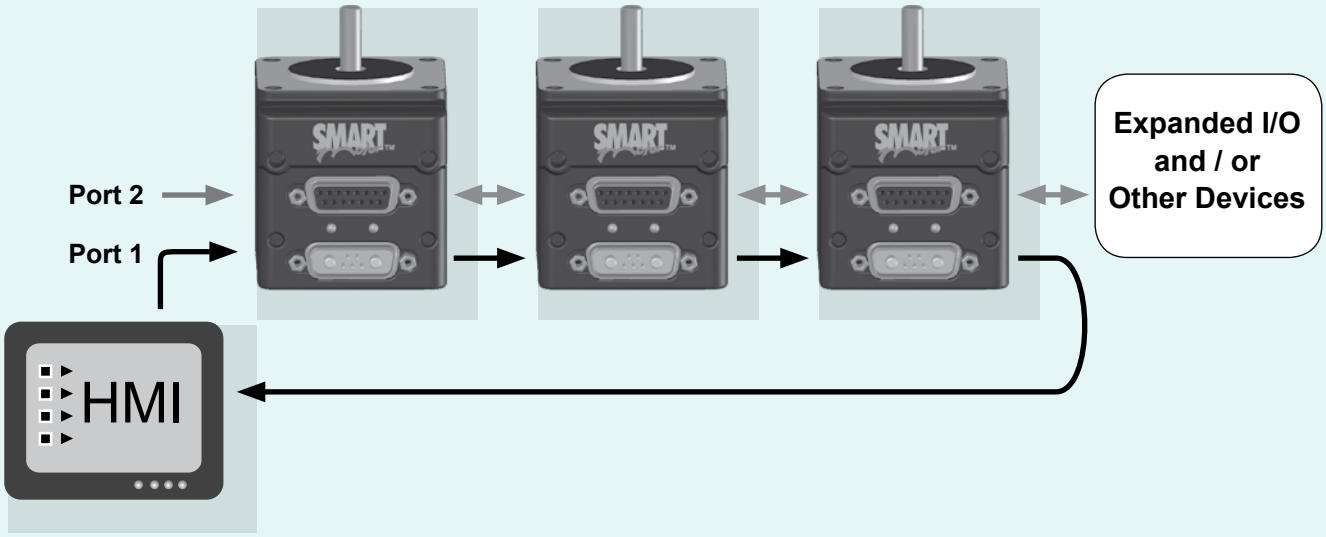

Dual Port Master Controller

- The Only Dual Port Integrated Solution
- The Only True Master Capable Integrated Solution
- Port 1: Use for HMI, Host PC, PLC, or Diagnostics
- Port 2: RS-485 Standard used for Motor-to-Motor communications

  Port 2 Options include:
  - ProfiBus™
  - DeviceNet™
  - CANopen
  - Ethernet

(Some Protocols are not available on all models, please consult factory for latest availability)

The Animatics SmartMotor™ is capable of simultaneous communications on both Primary and Secondary ports at the same time. Animatics offers the only Servo Motor solution on the market with back door parallel communications into ProfiBus, DeviceNet, CANopen, or Ethernet.

By making use of the secondary port as RS-485, each motor can communicate between each other uninterrupted by primary port master communications from a PLC, HMI or host PC. This allows for maximum data collection and axis control without communication collisions between motors.

When used with a simple HMI, the HMI can act as a main interface without concerns of inter-axis communications data packet losses. Each motor can respond upon demand to the HMI via Port 1 while maintaining Port 2 communications as necessary.

Torque Mode:

Open Loop directional control of power to the motor windings. In this mode the motor has knowledge of encoder position but does not use it for motion. The motor will increase speed until its commanded torque equalizes with load torque. If load torque decreases, shaft speed will increase. If load torque increases, shaft speed will decrease. In a static condition, force applied will be proportional to commanded torque.

Velocity Mode:

Closed Loop speed control based on Position over time, not frequency. This means that from the initial command to begin motion, the controller keeps track of what the actual position should be.

If load momentarily increases beyond the limits of the motor, shaft speed will be slightly reduced. If the load decreases back to within the capabilities of the motor, the shaft speed will increase beyond commanded speed in order to catch up to where it should have been had a constant velocity been maintained.

Position Mode:

Closed Loop control based on encoder feedback. All position mode moves are classified as either relative or absolute mode. Relative Mode means the motor is commanded to move a set distance in either direction relative to where the shaft is at the time.

Absolute Mode means the motor is commanded to move to a specific location regardless of initial position.

Mode Step (Step and Direction Input):

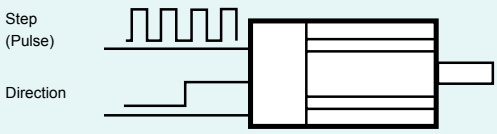

The motor will follow a standard step and direction input signal. A ratio of internal encoder counts to incoming pulses may be used. The Step Input can also be used as a high speed counter.

Mode Follow (Electronic Gearing):

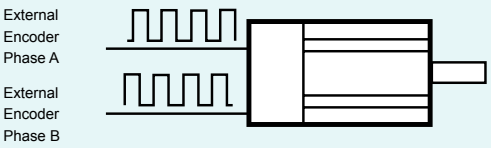

The motor will follow a standard Quadrature incremental encoder bi-directionally. A ratio of internal encoder counts to external encoder counts may be used.

Phase Offset Adjust Move:

Phase offset moves may be incorporated to move a relative distance while in Mode Step or Mode Follow. This distance is based on internal encoder counts. Phase Offsets are essentially a Move over a Move in Relative Position Mode. They allow positional adjustment in either direction while actively following the external encoder or pulse train. This method may be used to align gantries as well as control tension in roller feed applications.

CAM Mode (Electronic Cam Function):

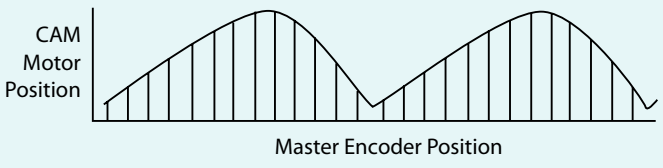

Similar to Mode Follow, the motor follows an external encoder. However, the motor moves to given points in a CAM table proportional to incoming external encoder counts.

Electronic CAM Function can be thought of as a table of electronic gear ratios that change dynamically based on external encoder position as a point of reference.

It is possible to create dwell points at the beginning or end of the CAM table to aid in easy cut-to-length applications.

Animatics SmartMotor™ Part Number Breakdowns:

SM 23 37 D - XXXX PLS2

SM	17	1X	D	OPTIONS*	
SmartMotor	23	2X	D-Sub Type Connectors	-DE	drive enable (see below)
	34	3X	DT D-Sub Type Connector & High Torque	-BRK	internal brake™
	NEMA Frame Size	4X	Applies to: SM2316, SM2337, SM3416 only	-DN2	DeviceNet™
		Motor Length Series		-PB	ProfiBus
				-ETH	Ethernet Option
				-C	CANopen Option
				-F1	1 flat on shaft
				-F2	2 flats on shaft
				-SL	reduce shaft length
				-S	Complete Sealed Option
				-S3	Sealed without Shaft Seal

This is a Part Number Overview and is not a complete list.

⚠ * Note: Not all options are available on all models. Please consult factory for full details.

HIGHLY RECOMMENDED OPTION. PLEASE READ !

Hardware "DE" Option:

The DE option allows the controller and drive-amplifier to be powered from separate 24-48 VDC power supplies.

- Controller can be powered from a standard 24 VDC supply
- **Position will not be lost on loss-of-drive-power**
- **No need to re-home**
- Load surges will not cause power surge on controller
- Standard battery options are made simpler

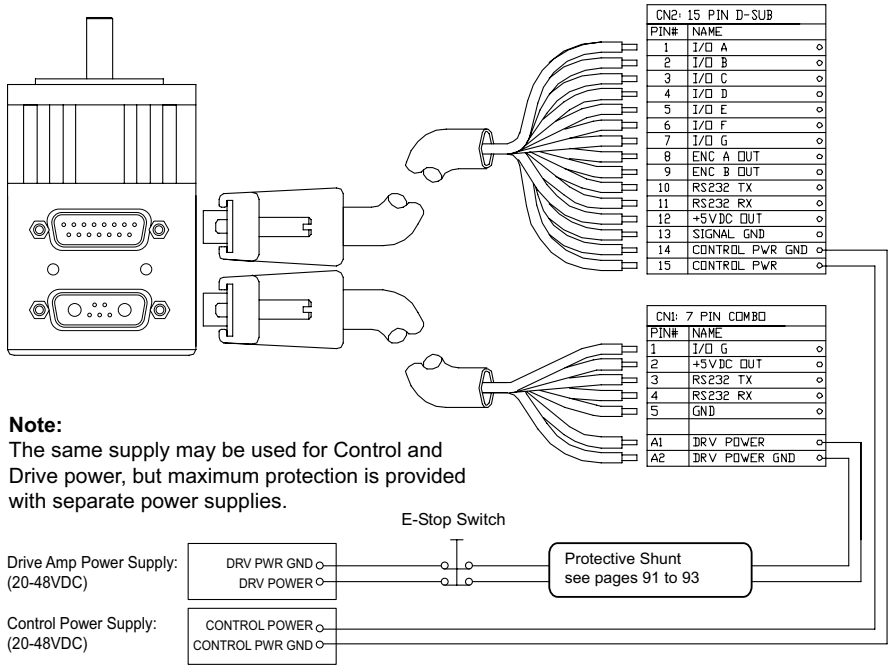

Note:
The same supply may be used for Control and Drive power, but maximum protection is provided with separate power supplies.

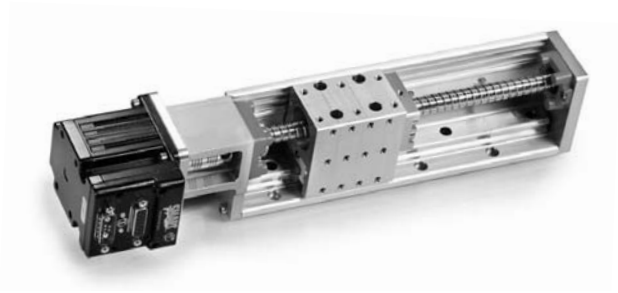

OEM Dynamics is the Systems Integration division of Animatics Corporation. Its purpose is to couple proven Integrated Servo Controls with innovative designs in Linear Actuators to provide System Components and sub-assemblies for high-end automation. With over 20 years of application designs operating on production floors internationally, we offer high performance, low cost, reliable components and sub systems for industries including but not limited to:

- Consumable Product Packaging Machines
- Semiconductor Wafer and Chip Processing
- Biomedical Process and Control Equipment
- Automotive Component Assembly and Testing
- CNC Wood and Metal Cutting Systems
- Aviation Testing and Control
- Nuclear Fuel Rod Handling Systems

All OEM Dynamics™ Linear Integrated Systems are covered by Animatics patent #5,912,541 and other patents are in progress worldwide

"Harmonic Linear Belt Drive Systems eliminate costly gear heads and brakes"

Low Cost Breakthrough!

Lowering cost without sacrificing quality, accuracy or system integrity is the number one topic and goal on the minds of the board of directors and management of every major company in the world. Today, the goal is achievable without resorting solely on the old fashioned cost cutting methods of reducing US and European employees in favor of offshore suppliers. OEM Dynamics now has a fully integrated linear motion system that reduces costs by reducing system parts and components as well as engineering and assembly time - through innovation, NOT outsourcing.

30-35% Savings on System Costs

Integrated SmartMotor™ technology is the invention of Animatics Corporation. "Harmonic Linear Drive™" belt actuator technology is the invention of Harmonic Linear Drives, Ltd. in England. The merging of these two technologies has shown to save as much as 35% when compared to the equivalent, conventional components. For any given axis of motion, this system design approach provides linear bearing load support, harmonic zero-backlash gear reduction, a true closed-loop brushless motor and digital drive, and a 32-bit programmable controller. The Intrinsic reduction provides a high resistance to back-driving, a benefit usually purchased in the form of a brake.

The SmartMotor eliminates a cabinet full of controls by building everything into the motor. The Harmonic Linear Drive™ eliminates a gear-head and brake by wrapping the belt around subtly different diameter pulleys in a way that produces inherent gear reduction using the Harmonic Principle. All told – this clever, compact combination uses fewer parts, increases reliability and markedly lowers the cost of your machine.

SmartMotor Part Number		
Continuous Torque	2.50	in-lb
	40	oz-in
	0.28	N-m
Peak Torque	4.00	in-lb
	64	oz-in
	0.45	N-m
	181	Watt

The following section covers individual motor data for each Class 4 PLS2 SmartMotor™.

Data Tables

The data table shows **maximum** sustained Torque, Power and Current. Note that the continuous torque numbers are typically over a given RPM range, however the Peak Torque is always at Zero-RPM stall and will not be available at higher RPMs.

⚠ WARNING

Class 4 PLS2 Series SmartMotors may be used as upgrades to replace older PLS series SmartMotors. However, ALL PLS2 series SmartMotors have twice the encoder resolution of prior equivalent sized PLS SmartMotors where available. As a result, on existing machines, program changes will be required to maintain proper distances, velocities and acceleration. Additionally it may require changes to following error limits and PID tuning parameters. Please consult Users Guide and help files as necessary.

CAD Drawings

Each CAD drawing shown is for reference only. Please consult factory or the Animatics website for the most recent drawing revision. All CAD drawings have both Metric and Standard units shown. Each drawing in the individual motor table section is for the standard motor with no Bus or Brake options. All other reference CAD drawings can be found after the Motor data section of this catalog.

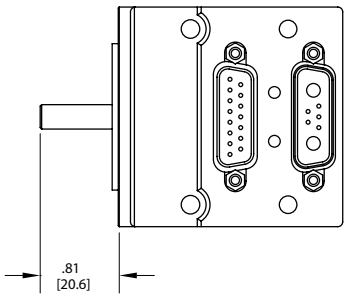

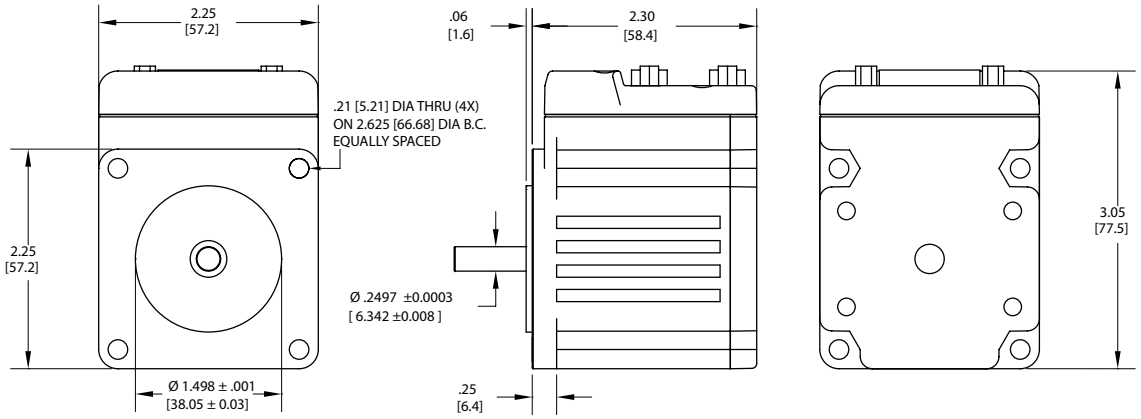

All SmartMotor data and specifications are subject to change without notice. Please consult the factory for the latest updates.

Understanding Animatics Torque Curves

Each Set of Torque curves depicts limits of both Continuous and Peak torque for the given SmartMotor™ over their full range speed.

Peak Torque Curve:

The Peak Torque Curve is derived from dyno testing and is the point at which peak current limit hardware settings of the drive prevent further torque in an effort to protect drive stage components.

Continuous Torque Curve:

The continuous Torque Curve is also derived from dyno testing, but is instead the point at which the temperature rises from an ambient of 25º C to the designed thermal limit.

For example, the motor will be placed on the dyno tester and set to operate at 1000 RPM continuously with the load slowly increased until the controller reaches its maximum sustained thermal limit. This limit is either 70º C or 85º C depending on the model number. All PLS2 SmartMotors are set to 85º C.

The far lower right side of the curve is limited by supply voltage. This is the point at which Back EMF suppresses any further speed increase. Higher supply voltages will shift the zero torque point of the curves further to the right.

Ambient Temperature Effects on Torque Curves and Motor Response:

If the motor is operated in an environment greater than 25º C, then it will reach its thermal limit faster for the same given load thereby further limiting continuous torque.

Therefore; any given motor torque curve MUST BE linearly de-rated for a given ambient temperature from 25º C to 70º C, 85º Cfor all PLS2 SmartMotors.

Supply Voltage Effects on Torque Curves and Motor Response:

Higher voltages have two-fold effects on torque curves. As mentioned above, raising voltage will shift the curve to the right. It will also allow higher current into the drive. However, Torque curves depict Torque at a given velocity.

If you double supply voltage, the motor can sustain twice the original velocity. But since acceleration is the differential of velocity, it can achieve 4 times the original acceleration. This is useful for high speed indexing and fast start/stop motion.

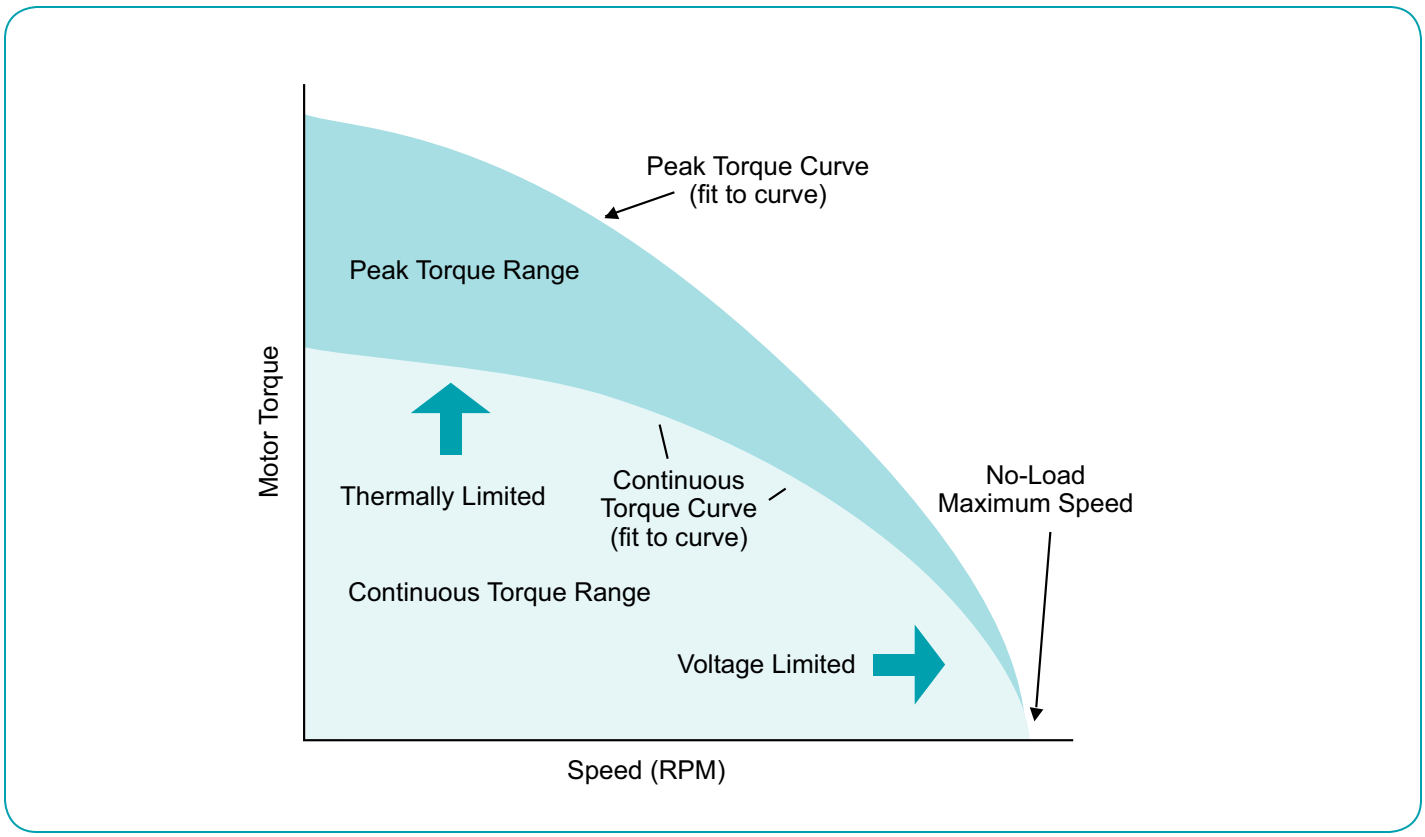

All Torque Curves in this catalog also have SHAFT OUTPUT Power Curves overlaid on them as well.

Power can be found by the following equation:

Power (kW) = Torque (N.m) x Speed (RPM) / 9.5488

For any given mechanical system being moved by a SmartMotor™, it is ideal to insure the motor is running within its optimum performance range. This can be achieved via proper mechanical system design by adjusting one of the following as it may apply:

- Gear Reduction
- Belt Reduction
- Lead Screw Pitch
- Pinion Gear diameter

Example 1: (Rotary Application)

Suppose you have a load that requires 300 RPM at the output of a gear head. Suppose the optimum speed range for the motor is 2100 RPM.

Divide the optimum operating speed by the load speed to get the ideal gear reduction. In this case : 2100 RPM / 300 RPM=7. So a 7:1 gear reduction would allow the motor to operate in its most efficient range.

Example 2 (Linear Application)

Suppose you need to run at 100mm/second via a ball screw and the motor has an ideal range of 3000RPM. 3000RPM/60= 50 Rotations per second. 100mm/sec divided by 50RPS is 2mm per rotation.

So an ideal pitch would be 2mm.

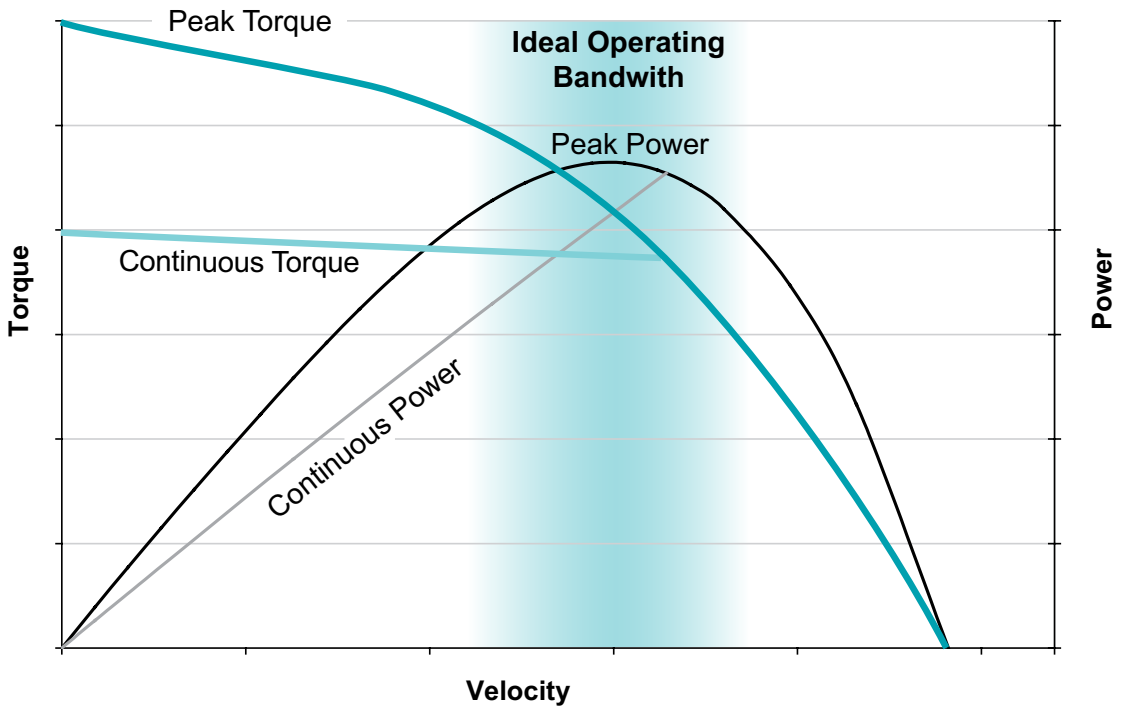

Considerations when using torque curves for motor sizing:

For any given product model number, there may be variations of as much as +/-10%.

The following diagram depicts data points collected from dyno testing of a given model motor. A best-fit torque curve is created from these data points and is then de-rated to at least 5% below the worst case data points. The de-rated curve is what is advertised. This means that within any given model number, EVERY motor sold will perform at or better than the advertised torque. Theoretically, ALL motors should be no less than 5% better than advertised and may be better than 20% higher.

The diagram shows motor loading in 4 areas.

1. This is ideal and depicts a load within the normal operating range of the motor. The motor should operate well and have no problems for many years.
2. The load is very close to the operating limit. The motor will run quite warm as compared to Point 1.
3. The load exceeds the advertised level and exceeds +10% expected range of possible torque capabilities. In this case, the motor will most likely either overheat quickly and fault out or immediately get a position error because it simply does not have enough power to support the load demand.

⚠ WARNING

4. The load exceeds the advertised operating limit of the motor. However, due to data scatter and de-rating, there may be some motors that will work and others that do not.

   Why? Because it is in the area of +/-10% variation expected in motors for a given size. This can become a major problem. Imagine designing a machine that operates in this range. Then you replicate that machine with many of them running on a production floor. One day, a motor at the lower end of the +/-10% expected variation would be placed on a new machine and that motor would get spurious drive faults. It would appear as though the motor is malfunctioning because… "all the other motors work just fine". This is unfortunate because, in reality, all motors were undersized and operating outside of their advertised limits.

   This is why it is important to properly calculate load torque to ensure the correct motor is designed into the application. Never assume that without proper load calculation and motor sizing, that testing of one motor means all of that size may work. This is simply not the case. **Try to keep operating conditions below the advertised limits to ensure reliable long-life operation.**

Note: See page 94 for Moment of Inertia Overview

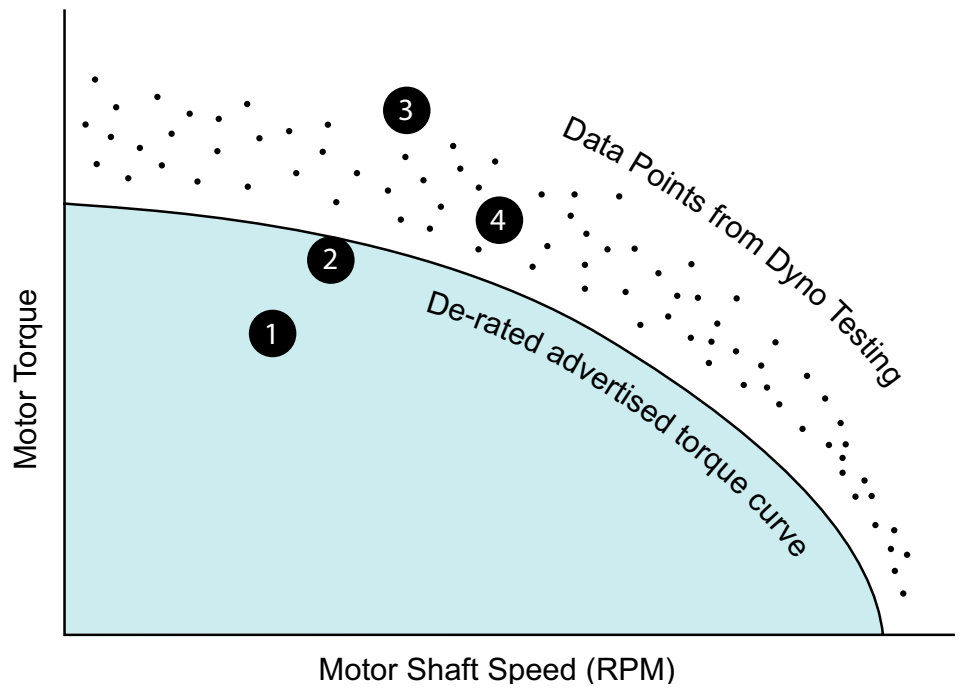

SM1720D-PLS2		
Continuous Torque	2.08	in-lb
	33	oz-in
	0.24	N-m
Peak Torque	3.82	in-lb
	61	oz-in
	0.43	N-m
Nominal Continuous Power	145	Watt
No Load Speed	7,900	RPM
Continuous Current @ Nominal Power	4.5	Amps
Voltage Constant	5.5	V/kRPM
Winding Resistance	1.8	ohms
Encoder Resolution	4,000	Counts/Rev
Rotor Inertia	0.00026	oz-in-sec^2
	0.184	10^{-5} Kg-m^2
Weight	1.2	lb
	0.55	kg
Shaft Diameter	0.197	in
	5.00	mm
Shaft, Radial Load	7	lb
	3.18	kg
Shaft, Axial Thrust Load	3	lb
	1.36	kg
EtherNet Available		
DeviceNet Available		
ProfiBus Available		
CanOpen Available		

Animatics SmartMotor SM1720D-PLS2 (No Options) CAD Drawing

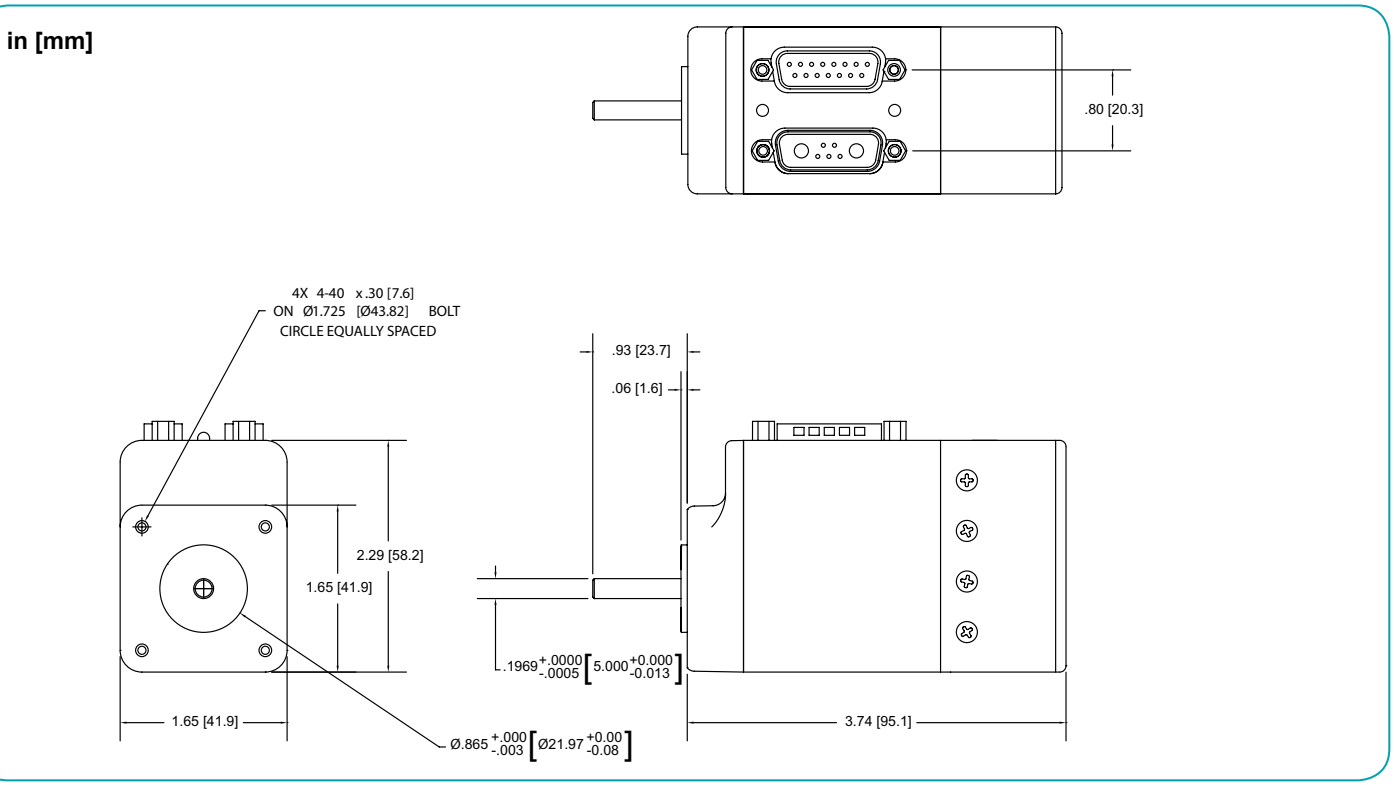

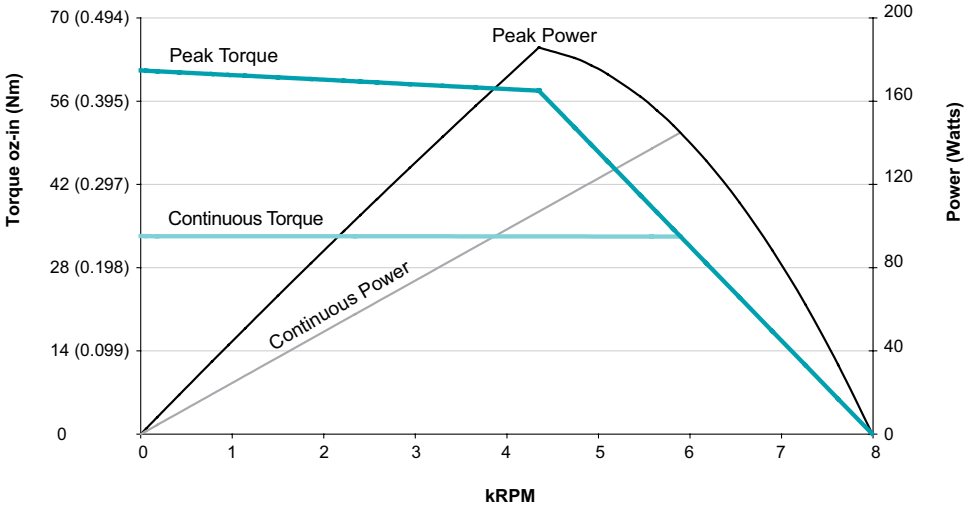

SM1720D-PLS2
at 48 VDC
at rise to 85°C

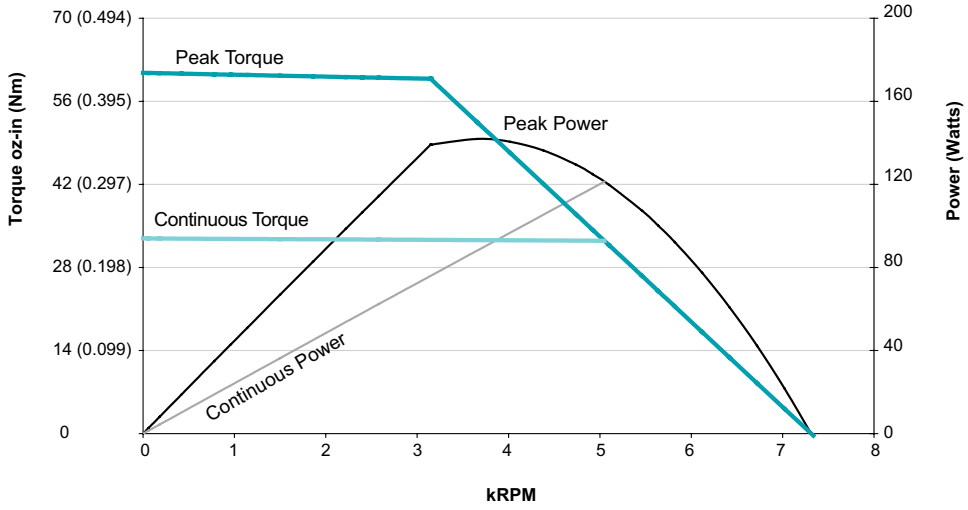

SM1720D-PLS2
at 42 VDC
at rise to 85°C

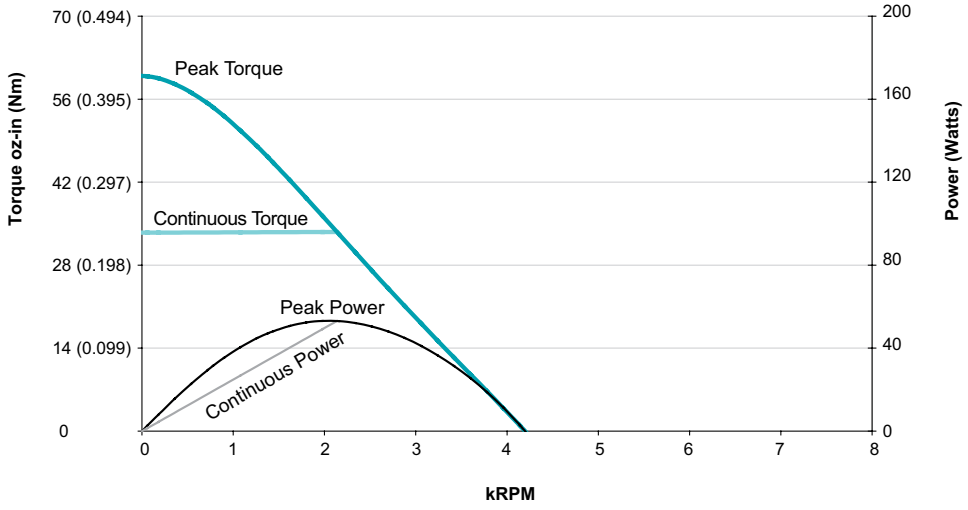

SM1720D-PLS2
at 24 VDC
at rise to 85°C

SM2316D-PLS2		
Continuous Torque	2.50	in-lb
	40	oz-in
	0.28	N-m
Peak Torque	4.00	in-lb
	64	oz-in
	0.45	N-m
Nominal Continuous Power	181	Watt
No Load Speed	10,400	RPM
Continuous Current @ Nominal Power	5.0	Amps
Voltage Constant	4.45	V/kRPM
Winding Resistance	1.0	ohms
Encoder Resolution	4,000	Counts/Rev
Rotor Inertia	0.00099	oz-in-sec^2
	0.699	10^{-5} Kg-m^2
Weight	1.0	lb
	0.45	kg
Shaft Diameter	0.250	in
	6.35	mm
Shaft, Radial Load	7	lb
	3.18	kg
Shaft, Axial Thrust Load	3	lb
	1.36	kg
EtherNet Available	Yes	
DeviceNet Available		
ProfiBus Available	Yes	
CanOpen Available	Yes	

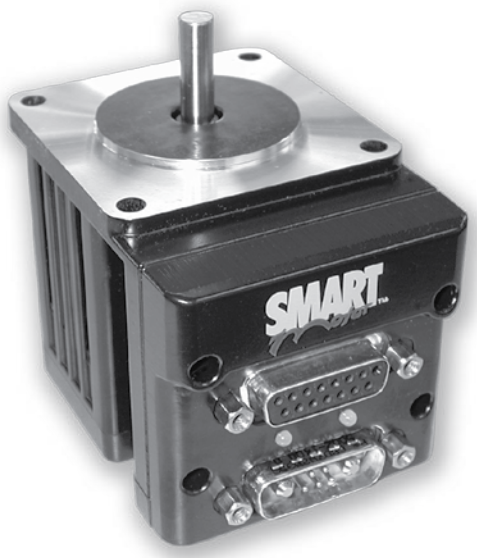

Animatics SmartMotor SM2316D-PLS2 (No Options) CAD Drawing

in [mm]

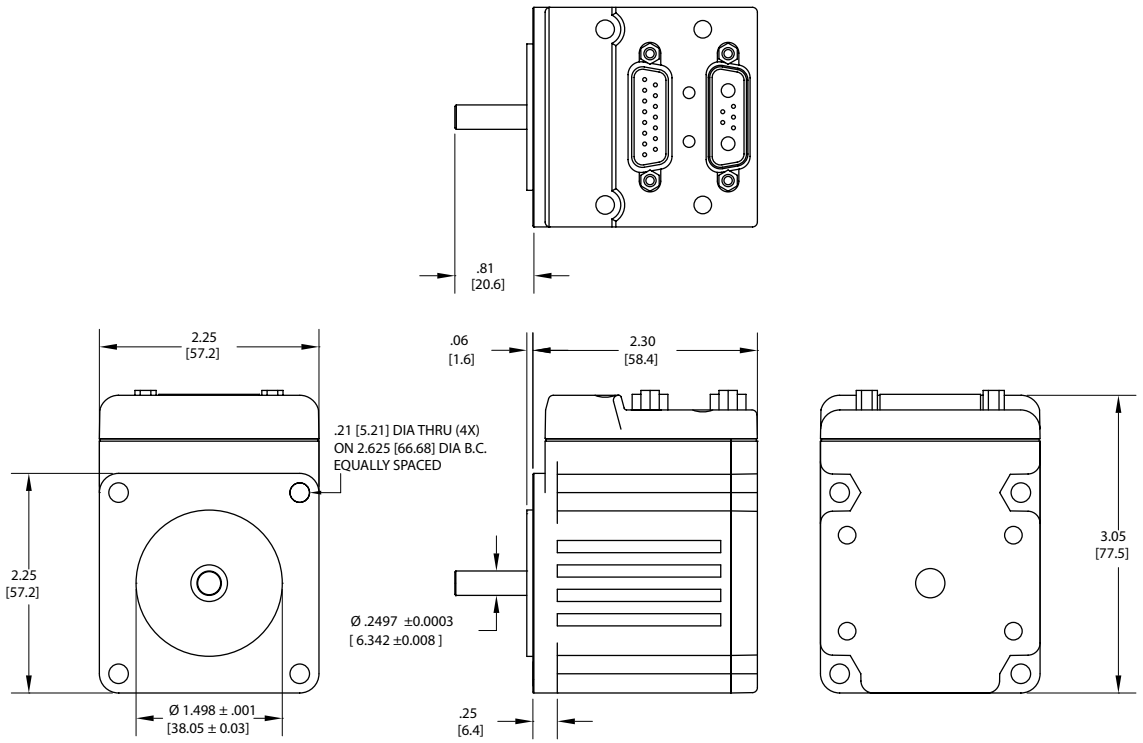

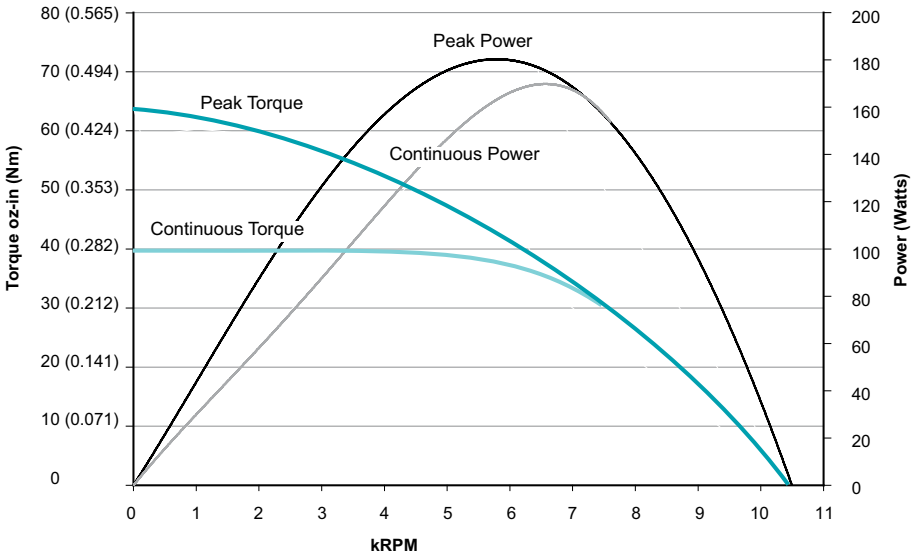

SM2316D-PLS2
at 48 VDC
at rise to 85°C

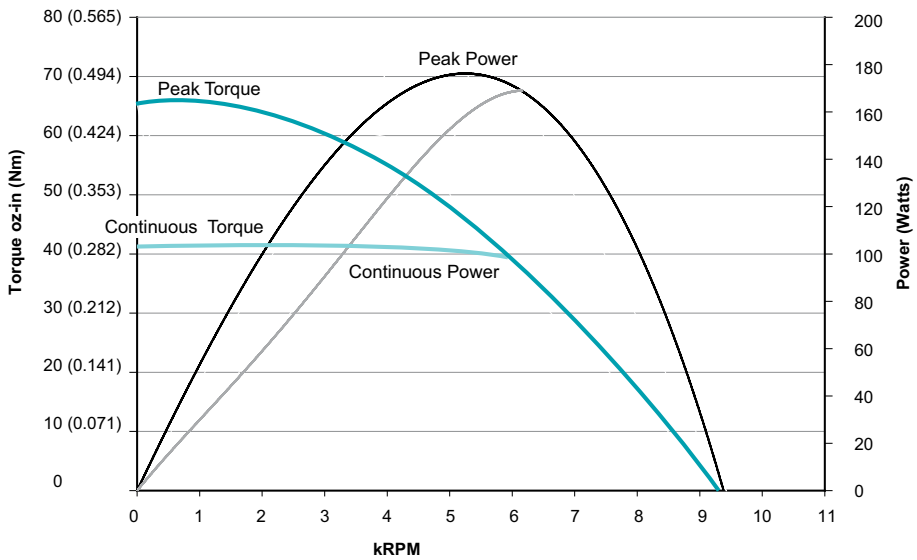

SM2316D-PLS2
at 42 VDC
at rise to 85°C

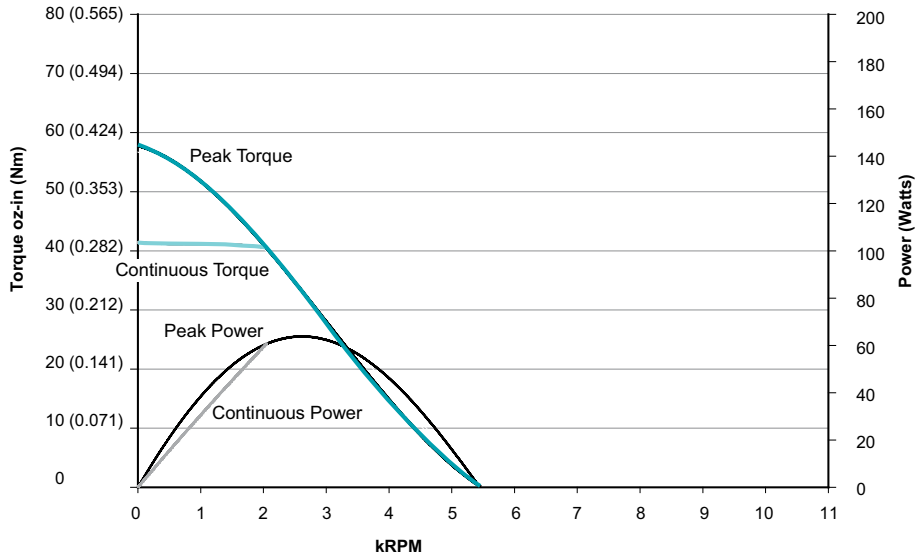

SM2316D-PLS2
at 24 VDC
at rise to 85°C

SM2316DT-PLS2		
Continuous Torque	4.61	in-lb
	74	oz-in
	0.52	N-m
Peak Torque	7.40	in-lb
	118	oz-in
	0.84	N-m
Nominal Continuous Power	204	Watt
No Load Speed	5,200	RPM
Continuous Current @ Nominal Power	6.1	Amps
Voltage Constant	9.08	V/kRPM
Winding Resistance	0.7	ohms
Encoder Resolution	4,000	Counts/Rev
Rotor Inertia	0.001	oz-in-sec^2
	0.706	10^{-5} Kg-m^2
Weight	1.3	lb
	0.59	kg
Shaft Diameter	0.250	in
	6.35	mm
Shaft, Radial Load	7	lb
	3.18	kg
Shaft, Axial Thrust Load	3	lb
	1.36	kg
EtherNet Available	Yes	
DeviceNet Available		
ProfiBus Available	Yes	
CanOpen Available	Yes	

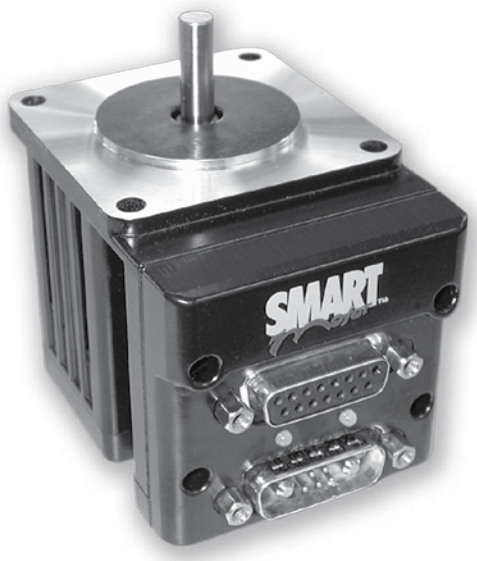

Animatics SmartMotor SM2316DT-PLS2 (No Options) CAD Drawing

in [mm]

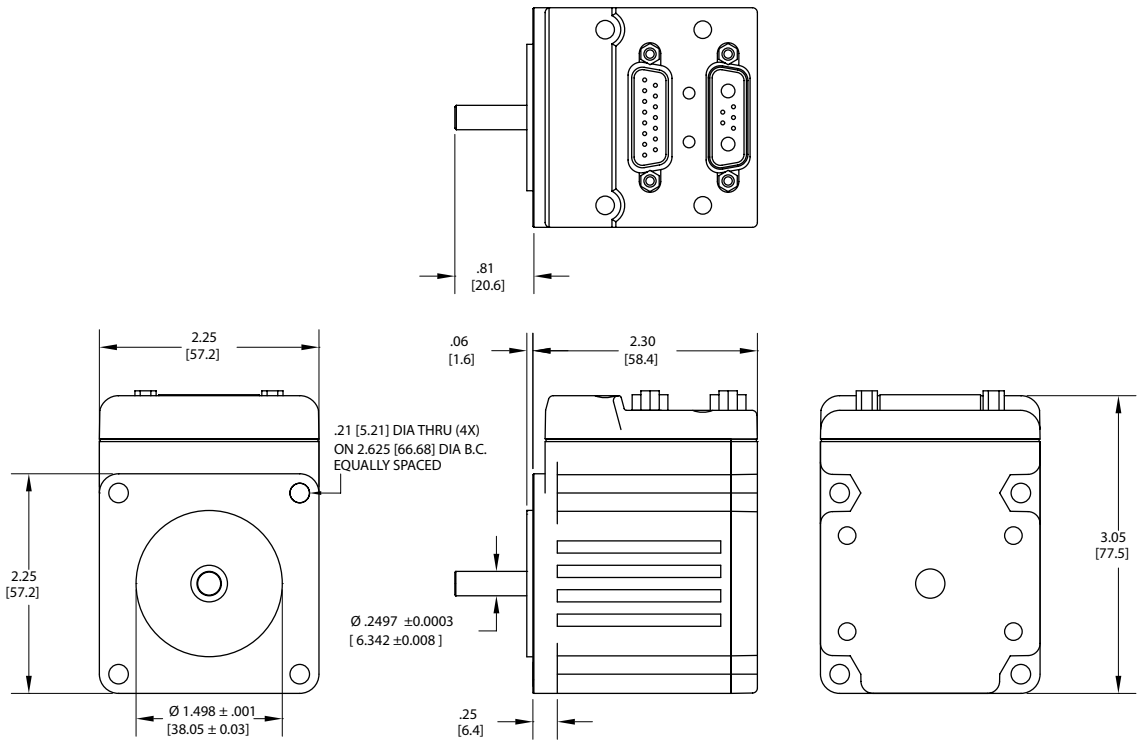

Animatics Corporation • All integrated motor products made by Animatics are covered by patent number 5,912,541

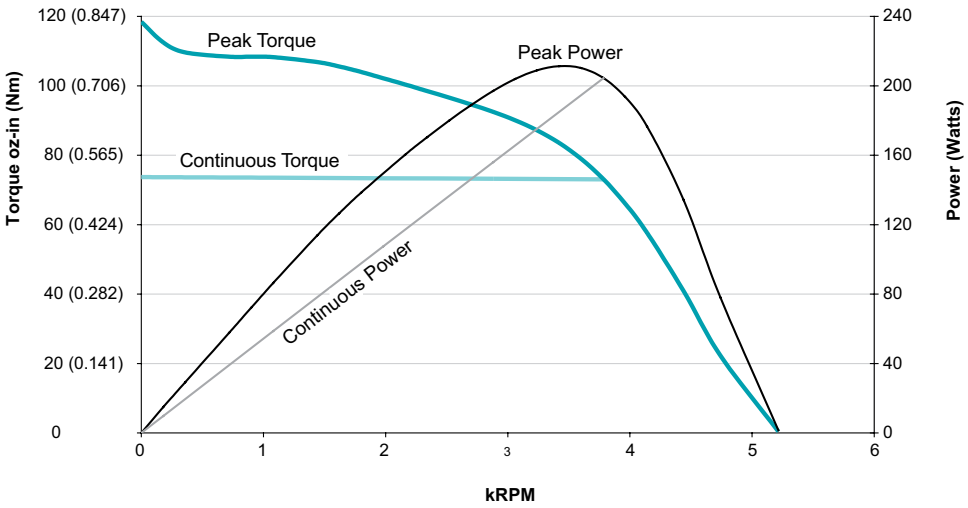

SM2316DT-PLS2
at 48 VDC
at rise to 85°C

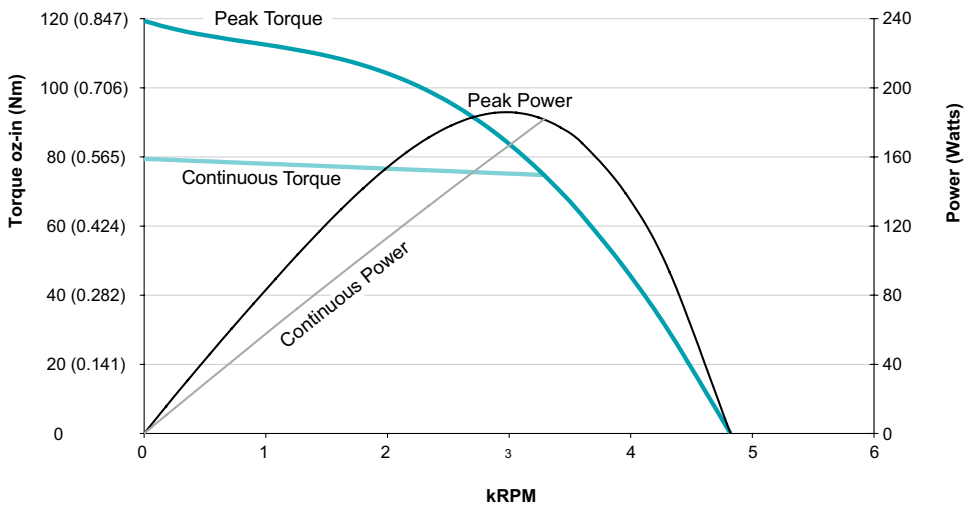

SM2316DT-PLS2
at 42 VDC
at rise to 85°C

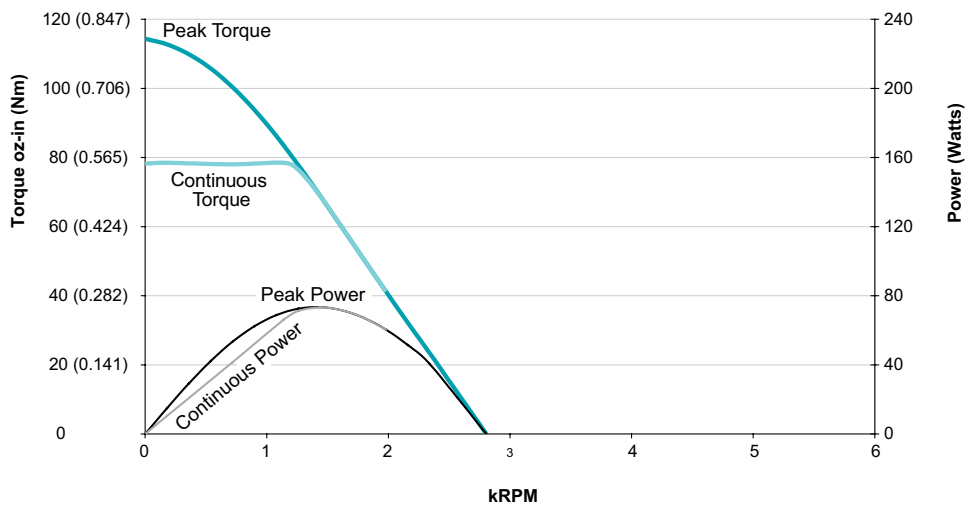

SM2316DT-PLS2
at 24 VDC
at rise to 85°C

SM2337D-PLS2		
Continuous Torque	2.86	in-lb
	46	oz-in
	0.32	N-m
Peak Torque	5.00	in-lb
	80	oz-in
	0.57	N-m
Nominal Continuous Power	191	Watt
No Load Speed	8,000	RPM
Continuous Current @ Nominal Power	5.6	Amps
Voltage Constant	5.62	V/kRPM
Winding Resistance	0.6	ohms
Encoder Resolution	4,000	Counts/Rev
Rotor Inertia	0.0019	oz-in-sec^2
	1.342	10^{-5} Kg-m^2
Weight	2.1	lb
	0.95	kg
Shaft Diameter	0.250	in
	6.35	mm
Shaft, Radial Load	7	lb
	3.18	kg
Shaft, Axial Thrust Load	3	lb
	1.36	kg
EtherNet Available		
DeviceNet Available	Yes*	
ProfiBus Available	Yes*	
CanOpen Available		

*Note: These options are only available for PLS firmware, not PLS2 firmware

Animatics SmartMotor SM2337D-PLS2 (No Options) CAD Drawing

in [mm]

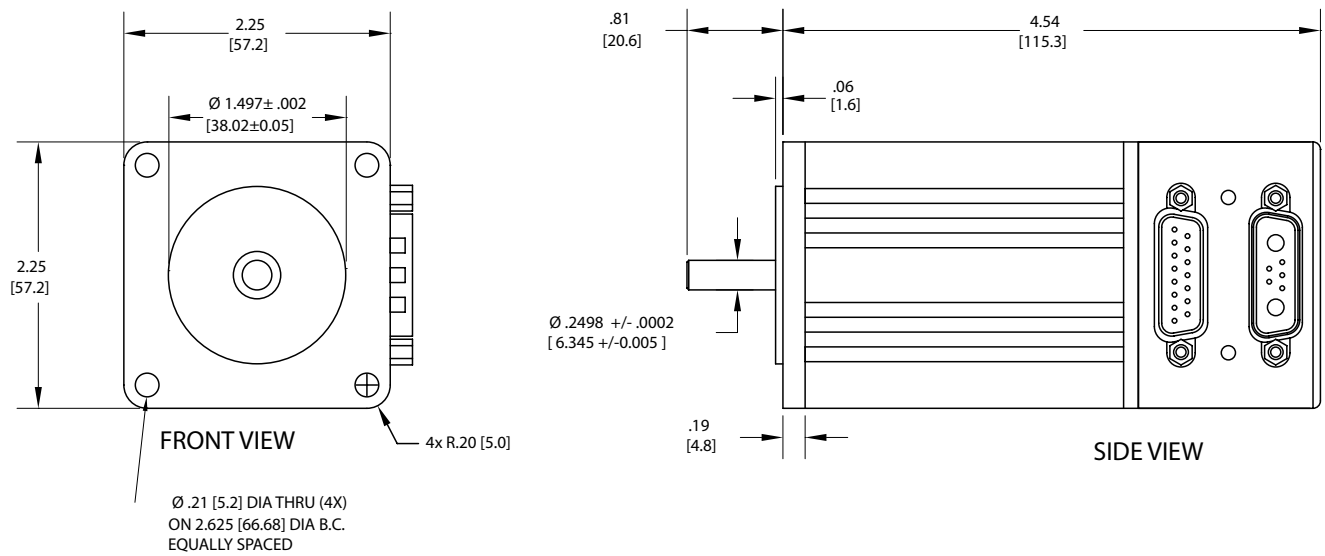

Animatics Corporation • All integrated motor products made by Animatics are covered by patent number 5,912,541

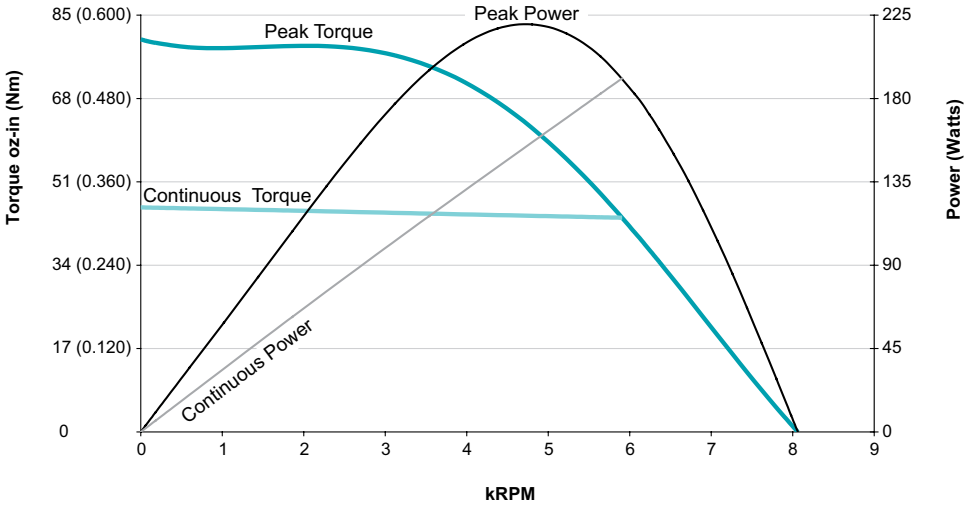

SM2337D-PLS2
at 48 VDC
at rise to 85°C

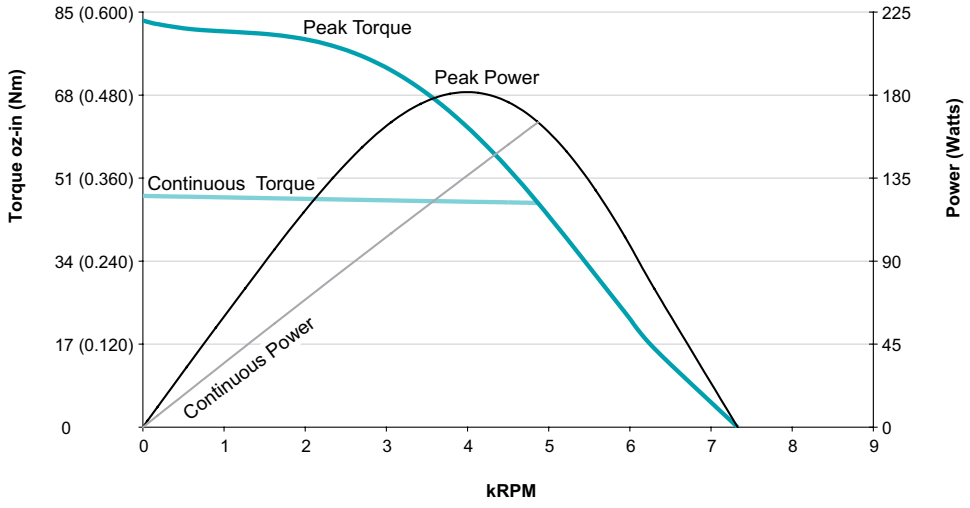

SM2337D-PLS2
at 42 VDC
at rise to 85°C

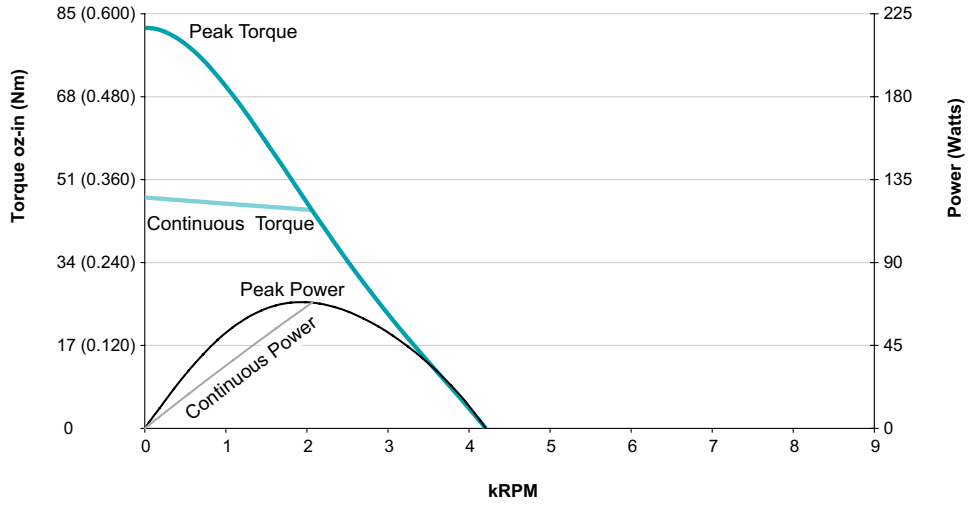

SM2337D-PLS2
at 24 VDC
at rise to 85°C

SM2337DT-PLS2		
Continuous Torque	5.18	in-lb
	83	oz-in
	0.59	N-m
Peak Torque	9.80	in-lb
	157	oz-in
	1.11	N-m
Nominal Continuous Power	186	Watt
No Load Speed	4,000	RPM
Continuous Current @ Nominal Power	5.9	Amps
Voltage Constant	10.95	V/kRPM
Winding Resistance	0.9	ohms
Encoder Resolution	4,000	Counts/Rev
Rotor Inertia	0.0019	oz-in-sec^2
	1.342	10^{-5} Kg-m^2
Weight	2.2	lb
	0.98	kg
Shaft Diameter	0.250	in
	6.35	mm
Shaft, Radial Load	7	lb
	3.18	kg
Shaft, Axial Thrust Load	3	lb
	1.36	kg
EtherNet Available		
DeviceNet Available	Yes*	
ProfiBus Available	Yes*	
CanOpen Available		

*Note: These options are only available for PLS firmware, not PLS2 firmware

Animatics SmartMotor SM2337DT-PLS2 (No Options) CAD Drawing

in [mm]

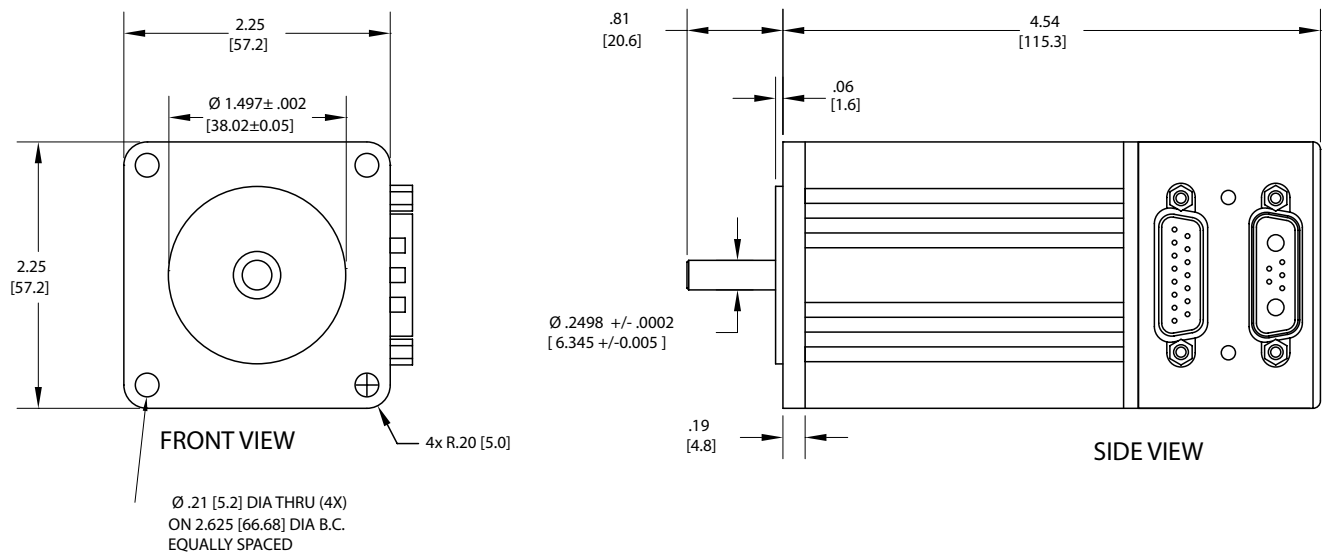

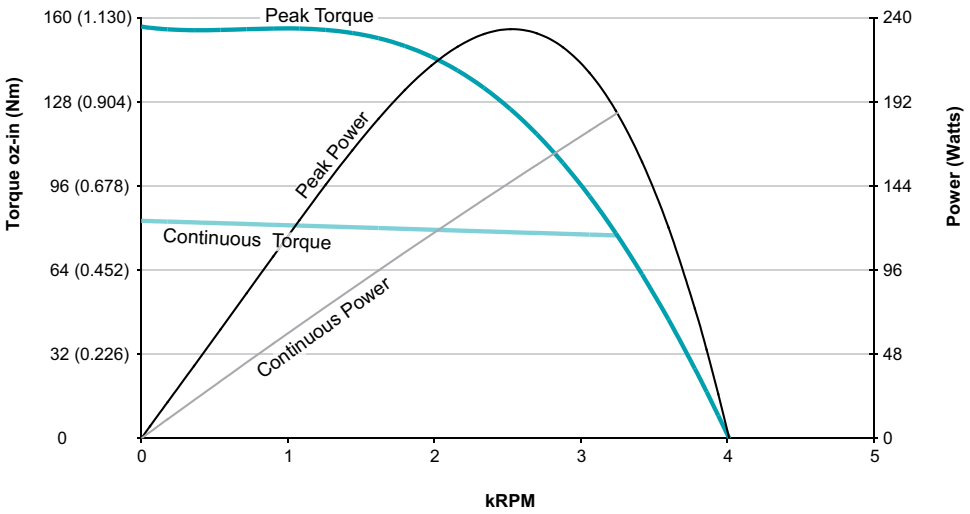

SM2337DT-PLS2
at 48 VDC
at rise to 85°C

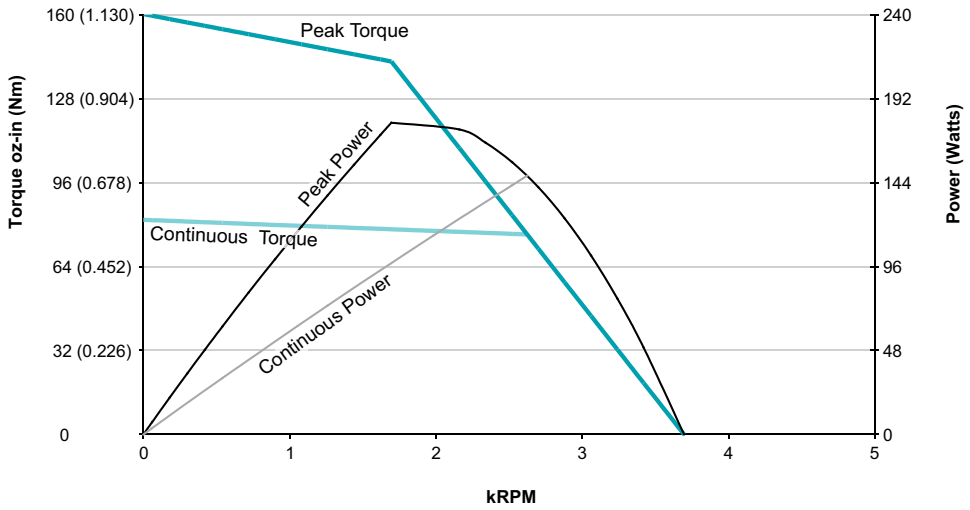

SM2337DT-PLS2
at 42 VDC
at rise to 85°C

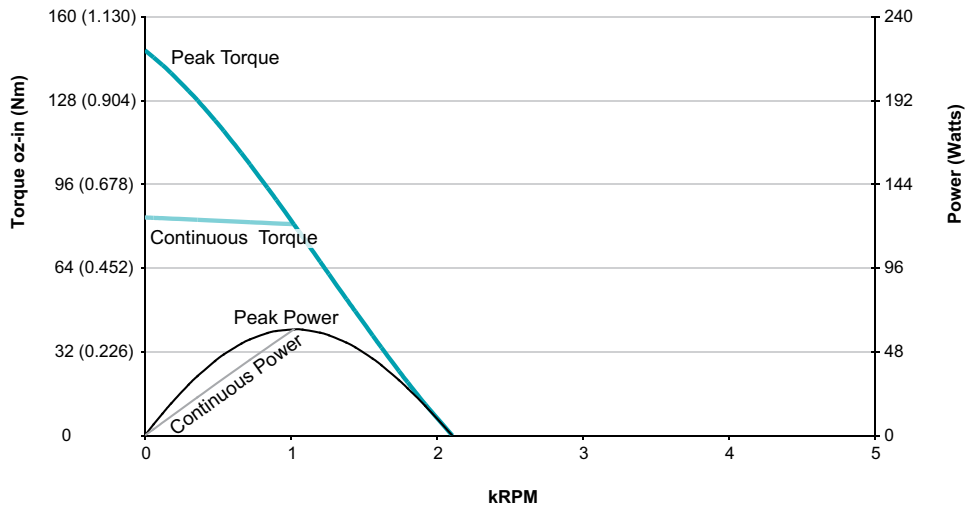

SM2337DT-PLS2
at 24 VDC
at rise to 85°C

SM2320D-PLS2		
Continuous Torque	2.96	in-lb
	47	oz-in
	0.33	N-m
Peak Torque	5.03	in-lb
	80	oz-in
	0.57	N-m
Nominal Continuous Power	226	Watt
No Load Speed	8,100	RPM
Continuous Current @ Nominal Power	6.6	Amps
Voltage Constant	6.6	V/kRPM
Winding Resistance	1.1	ohms
Encoder Resolution	4,000	Counts/Rev
Rotor Inertia	0.00184	oz-in-sec^2
	1.300	10^{-5} Kg-m^2
Weight	1.7	lb
	0.79	kg
Shaft Diameter	0.250	in
	6.35	mm
Shaft, Radial Load	7	lb
	3.18	kg
Shaft, Axial Thrust Load	3	lb
	1.36	kg
EtherNet Available		
DeviceNet Available	Yes*	
ProfiBus Available	Yes*	
CanOpen Available		

*Note: These options are only available for PLS firmware, not PLS2 firmware

Animatics SmartMotor SM2320D-PLS2 (No Options) CAD Drawing

in [mm]

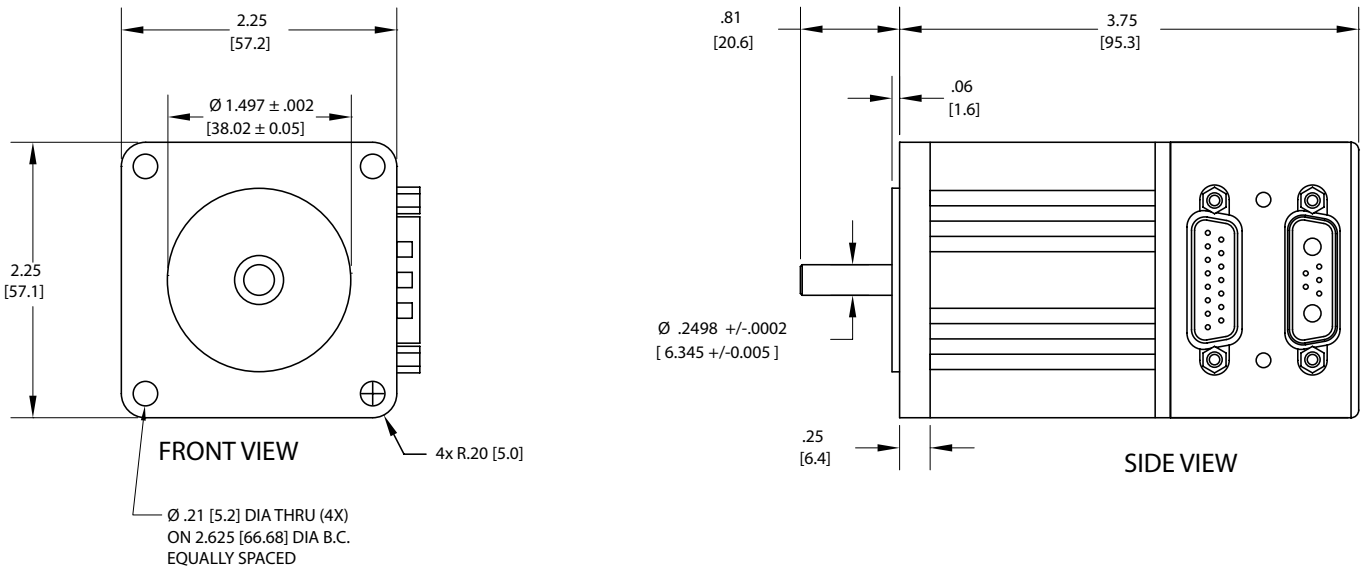

Animatics Corporation • All integrated motor products made by Animatics are covered by patent number 5,912,541

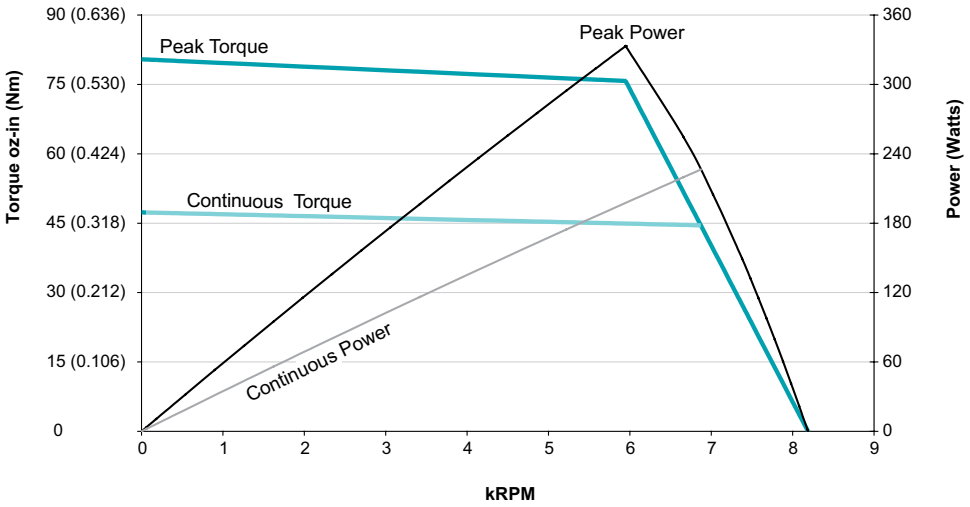

SM2320D-PLS2
at 48 VDC
at rise to 85°C

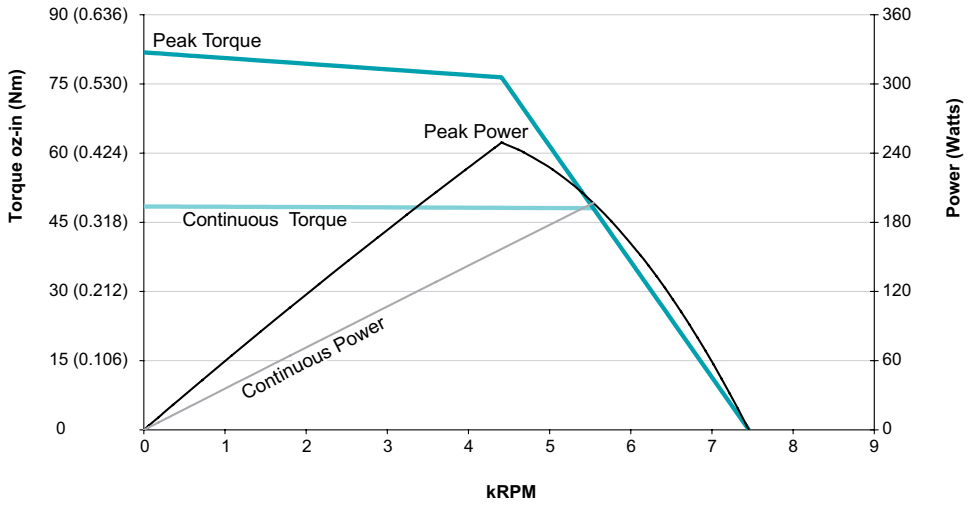

SM2320D-PLS2
at 42 VDC
at rise to 85°C

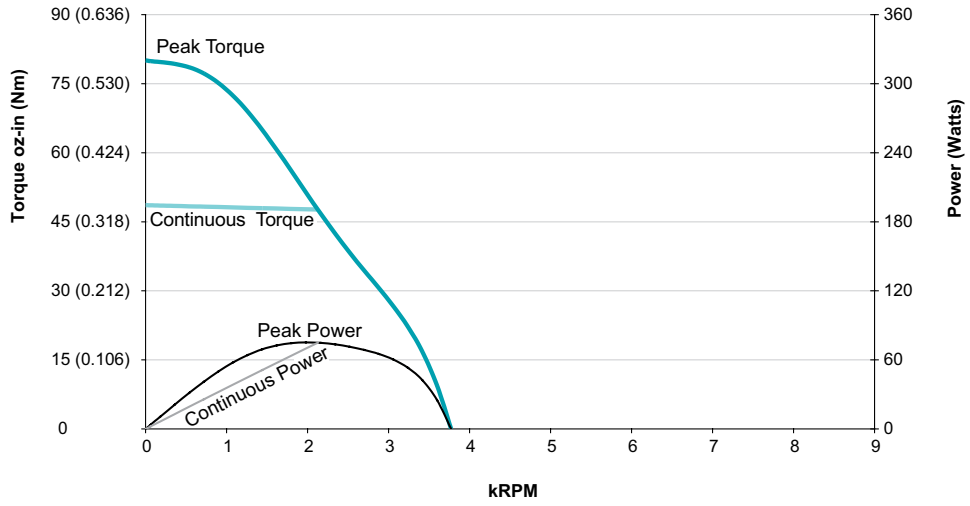

SM2320D-PLS2
at 24 VDC
at rise to 85°C

SM2330D-PLS2		
Continuous Torque	3.98	in-lb
	64	oz-in
	0.45	N-m
Peak Torque	6.86	in-lb
	110	oz-in
	0.77	N-m
Nominal Continuous Power	220	Watt
No Load Speed	5,600	RPM
Continuous Current @ Nominal Power	6.8	Amps
Voltage Constant	9.32	V/kRPM
Winding Resistance	1.2	ohms
Encoder Resolution	4,000	Counts/Rev
Rotor Inertia	0.00273	oz-in-sec^2
	1.928	10^{-5} Kg-m^2
Weight	2.3	lb
	1.03	kg
Shaft Diameter	0.250	in
	6.35	mm
Shaft, Radial Load	7	lb
	3.18	kg
Shaft, Axial Thrust Load	3	lb
	1.36	kg
EtherNet Available		
DeviceNet Available	Yes*	
ProfiBus Available	Yes*	
CanOpen Available		

*Note: These options are only available for PLS firmware, not PLS2 firmware

Animatics SmartMotor SM2330D-PLS2 (No Options) CAD Drawing

in [mm]

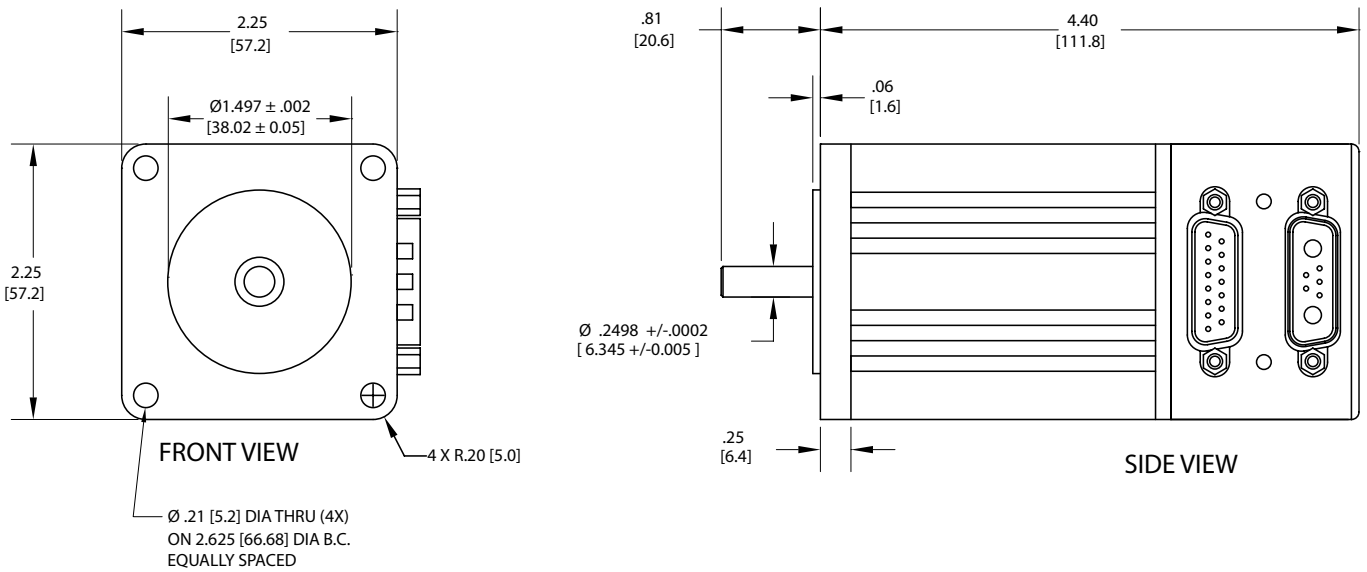

Animatics Corporation • All integrated motor products made by Animatics are covered by patent number 5,912,541

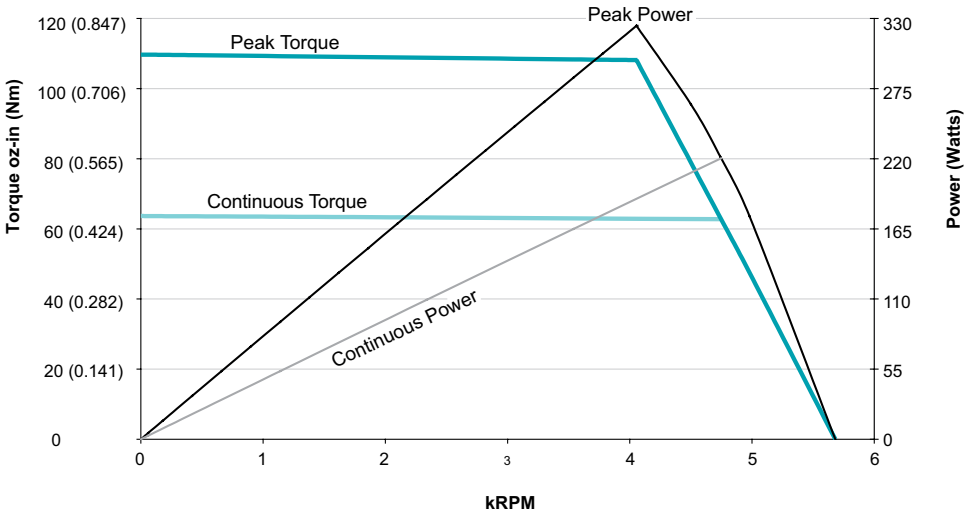

SM2330D-PLS2
at 48 VDC
at rise to 85°C

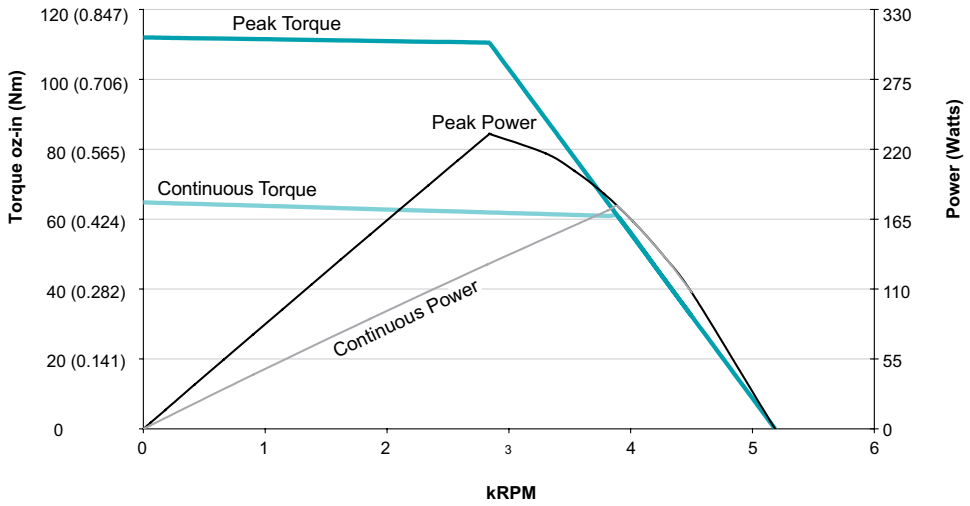

SM2330D-PLS2
at 42 VDC
at rise to 85°C

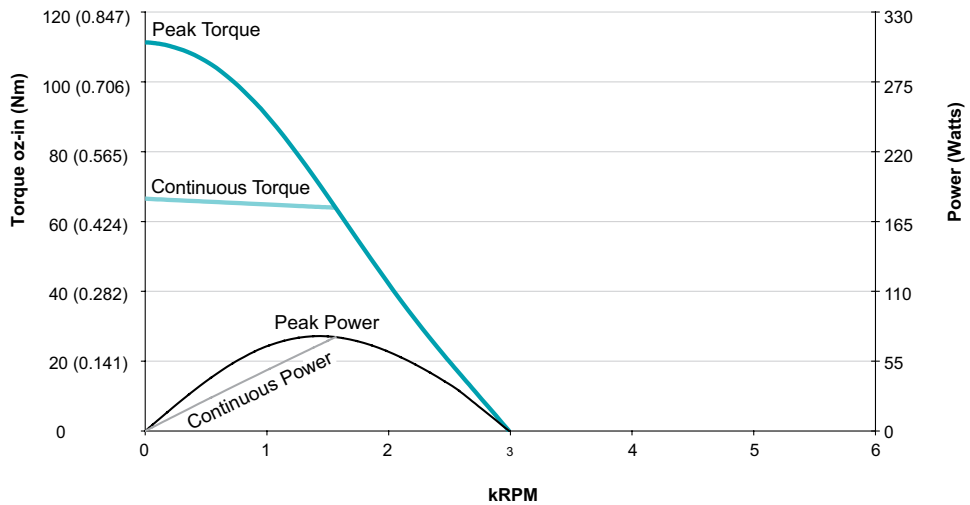

SM2330D-PLS2
at 24 VDC
at rise to 85°C

SM2340D-PLS2		
Continuous Torque	4.88	in-lb
	78	oz-in
	0.55	N-m
Peak Torque	8.04	in-lb
	129	oz-in
	0.91	N-m
Nominal Continuous Power	253	Watt
No Load Speed	5,300	RPM
Continuous Current @ Nominal Power	7.5	Amps
Voltage Constant	10.26	V/kRPM
Winding Resistance	1.0	ohms
Encoder Resolution	4,000	Counts/Rev
Rotor Inertia	0.00362	oz-in-sec^2
	2.557	10^{-5} Kg-m^2
Weight	2.8	lb
	1.27	kg
Shaft Diameter	0.250	in
	6.35	mm
Shaft, Radial Load	7	lb
	3.18	kg
Shaft, Axial Thrust Load	3	lb
	1.36	kg
EtherNet Available		
DeviceNet Available	Yes*	
ProfiBus Available	Yes*	
CanOpen Available		

*Note: These options are only available for PLS firmware, not PLS2 firmware

Animatics SmartMotor SM2340D-PLS2 (No Options) CAD Drawing

in [mm]

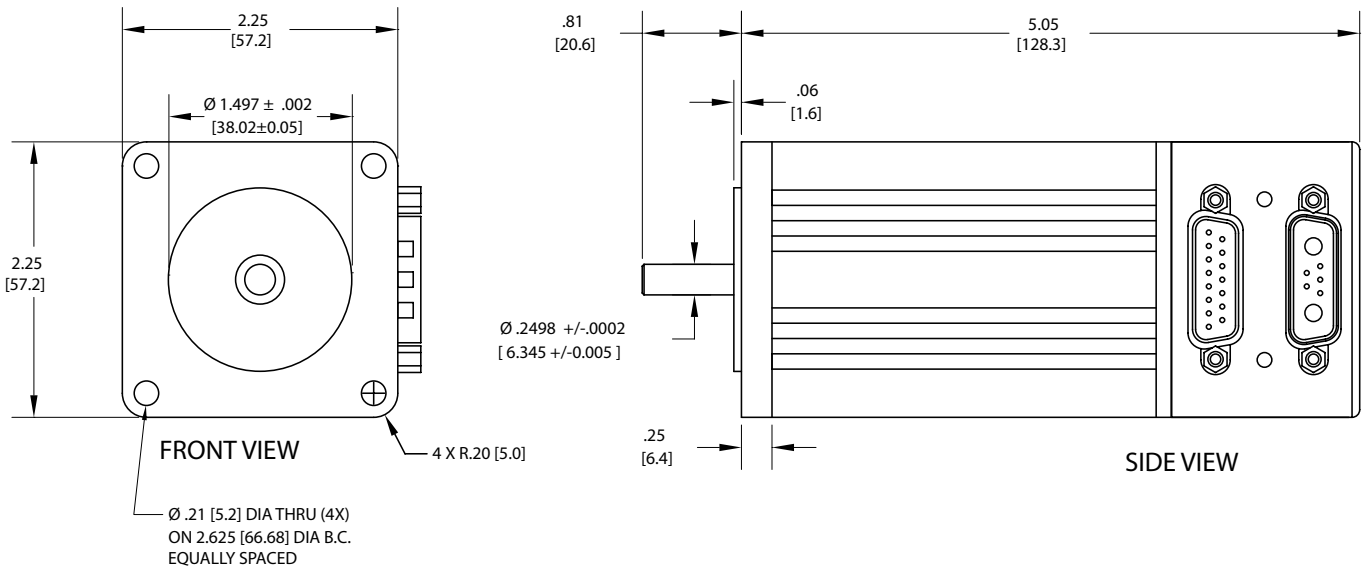

Animatics Corporation • All integrated motor products made by Animatics are covered by patent number 5,912,541

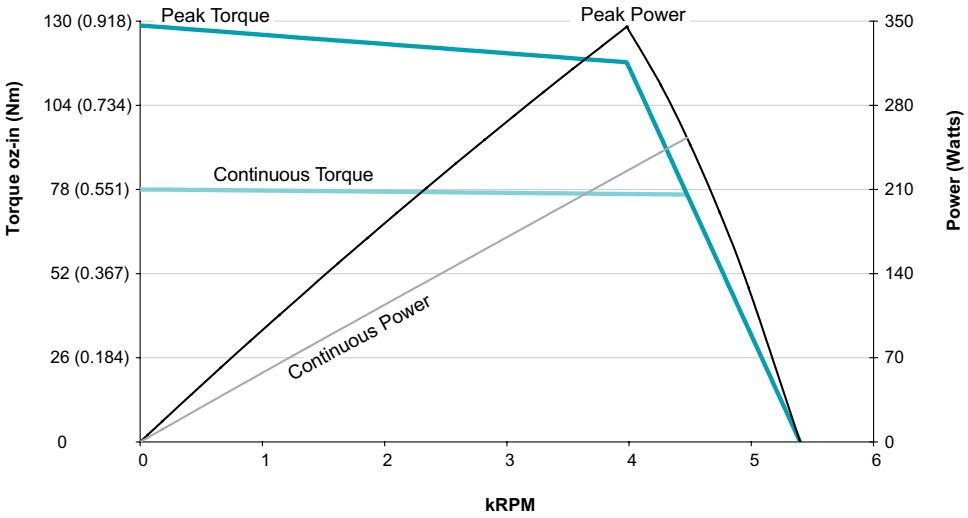

SM2340D-PLS2
at 48 VDC
at rise to 85°C

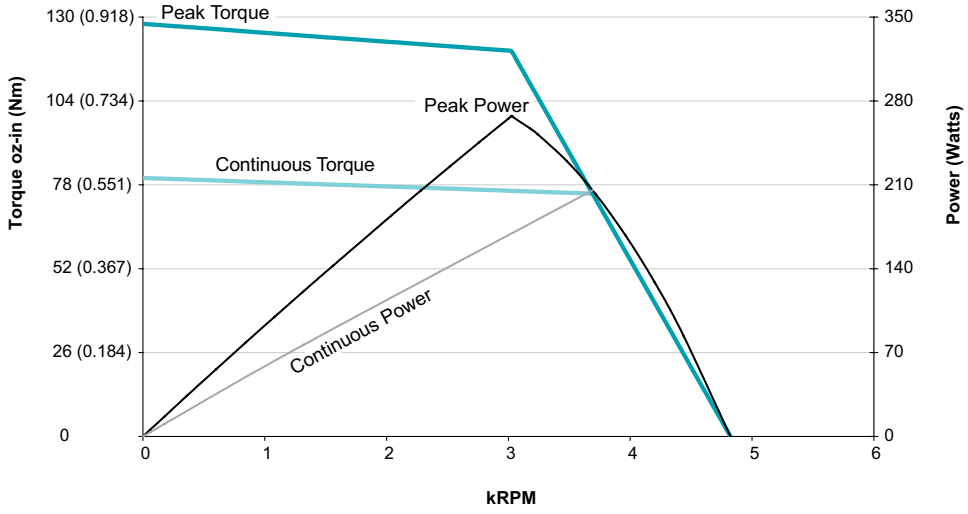

SM2340D-PLS2
at 42 VDC
at rise to 85°C

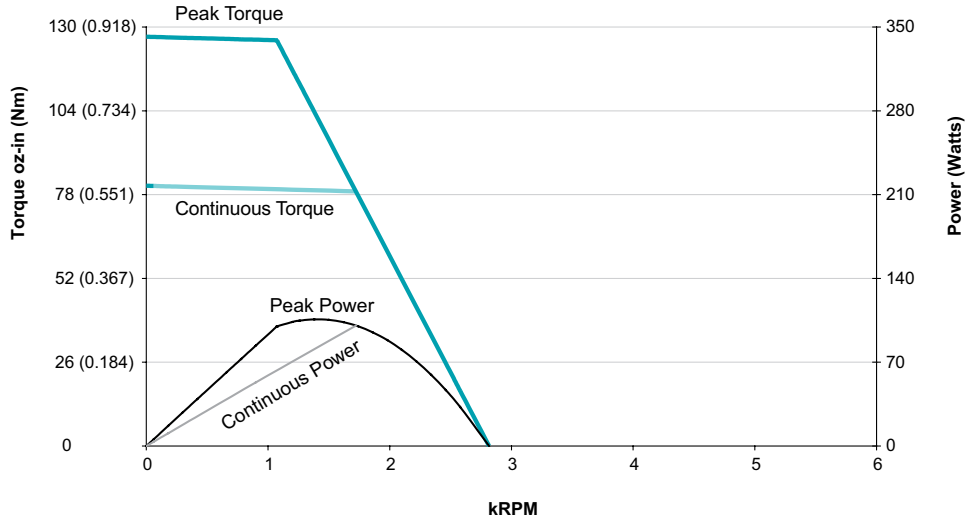

SM2340D-PLS2
at 24 VDC
at rise to 85°C

SM3416D-PLS2		
Continuous Torque	9.67	in-lb
	155	oz-in
	1.09	N-m
Peak Torque	14.12	in-lb
	226	oz-in
	1.60	N-m
Nominal Continuous Power	235	Watt
No Load Speed	3,100	RPM
Continuous Current @ Nominal Power	7.4	Amps
Voltage Constant	15.5	V/kRPM
Winding Resistance	0.6	ohms
Encoder Resolution	8,000	Counts/Rev
Rotor Inertia	0.014	oz-in-sec^2
	9.890	10^{-5} Kg-m^2
Weight	5.0	lb
	2.27	kg
Shaft Diameter	0.375	in
	9.53	mm
Shaft, Radial Load	15	lb
	6.80	kg
Shaft, Axial Thrust Load	3	lb
	1.36	kg
EtherNet Available	Yes	
DeviceNet Available		
ProfiBus Available	Yes	
CanOpen Available		

Animatics SmartMotor SM3416D-PLS2 (No Options) CAD Drawing

in [mm]

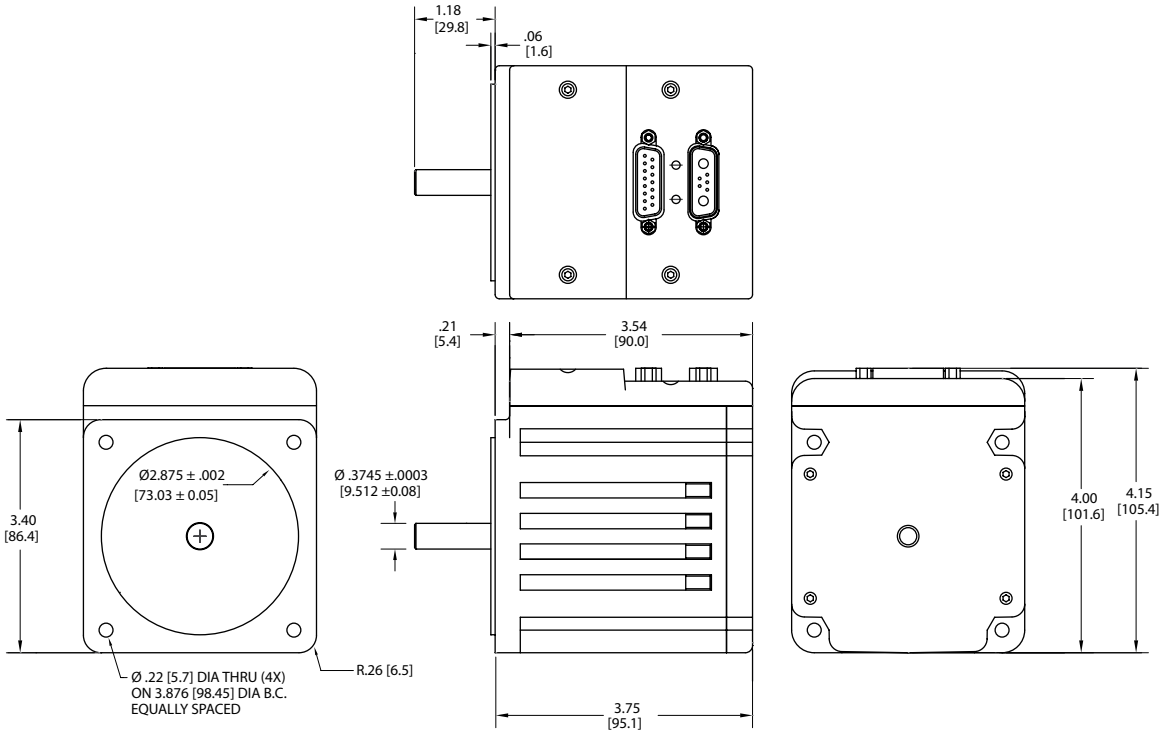

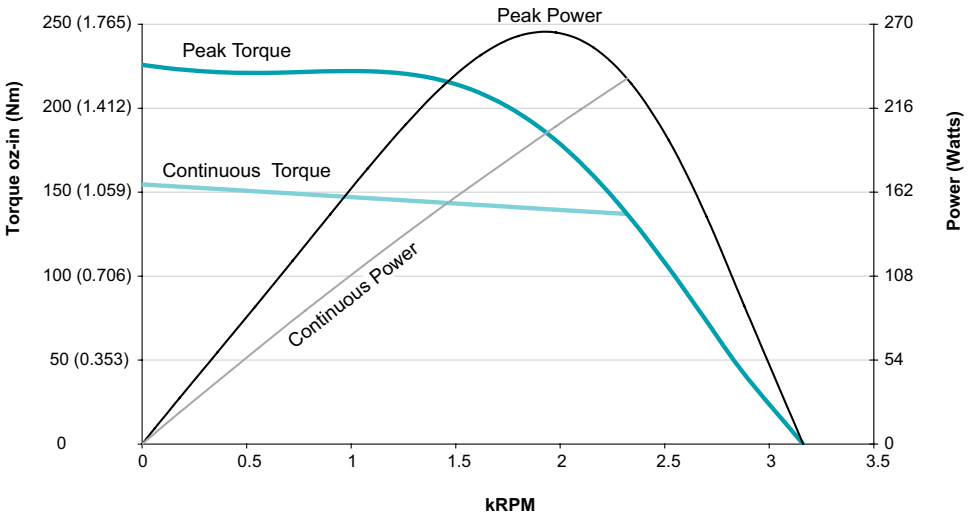

SM3416D-PLS2
at 48 VDC
at rise to 85°C

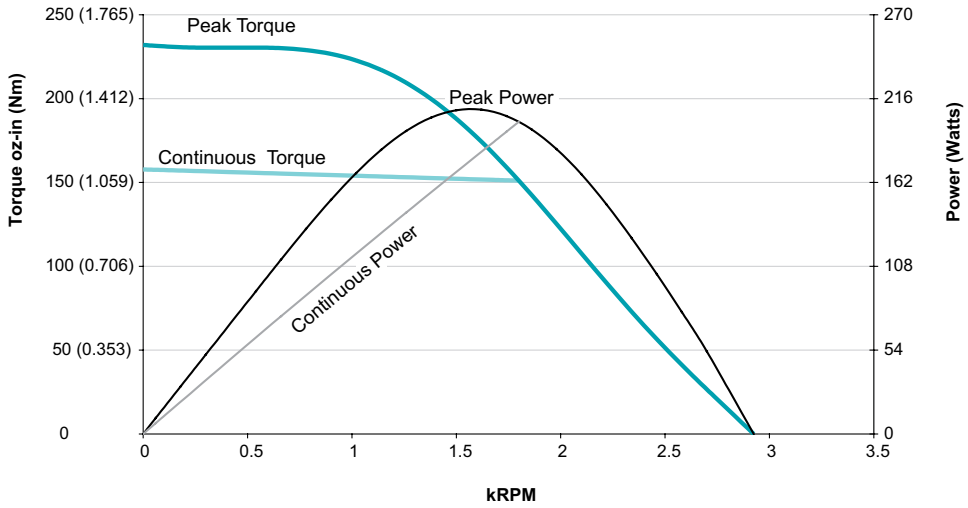

SM3416D-PLS2
at 42 VDC
at rise to 85°C

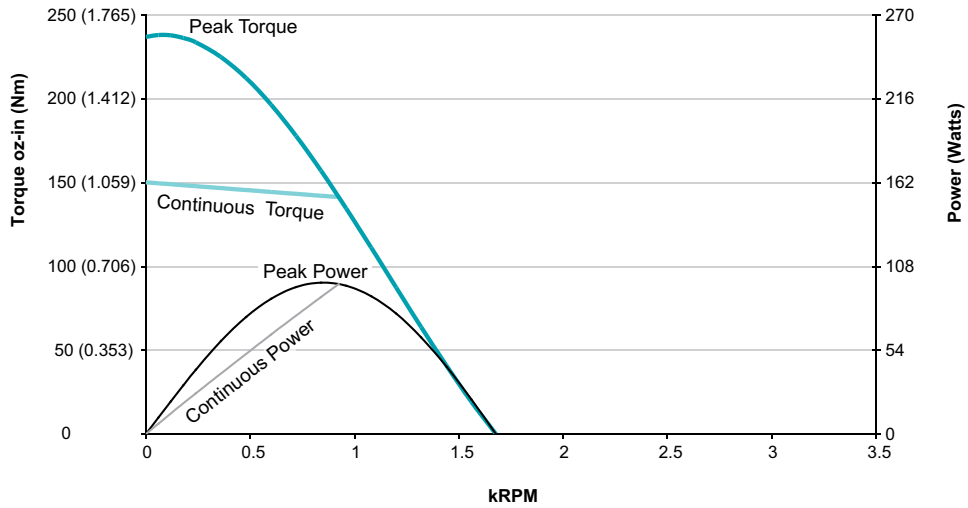

SM3416D-PLS2
at 24 VDC
at rise to 85°C

SM3416DT-PLS2		
Continuous Torque	12.83	in-lb
	205	oz-in
	1.45	N-m
Peak Torque	30.00	in-lb
	480	oz-in
	3.39	N-m
Nominal Continuous Power	615	Watt
No Load Speed	5,100	RPM
Continuous Current @ Nominal Power	15.5	Amps
Voltage Constant	8.9	V/kRPM
Winding Resistance	0.06	ohms
Encoder Resolution	8,000	Counts/Rev
Rotor Inertia	0.0142	oz-in-sec^2
	10.031	10^{-5} Kg-m^2
Weight	5.5	lb
	2.49	kg
Shaft Diameter	0.500	in
	12.70	mm
Shaft, Radial Load	30	lb
	13.61	kg
Shaft, Axial Thrust Load	3	lb
	1.36	kg
EtherNet Available	Yes	
DeviceNet Available		
ProfiBus Available	Yes	
CanOpen Available		

Animatics SmartMotor SM3416DT-PLS2 (No Options) CAD Drawing

in [mm]

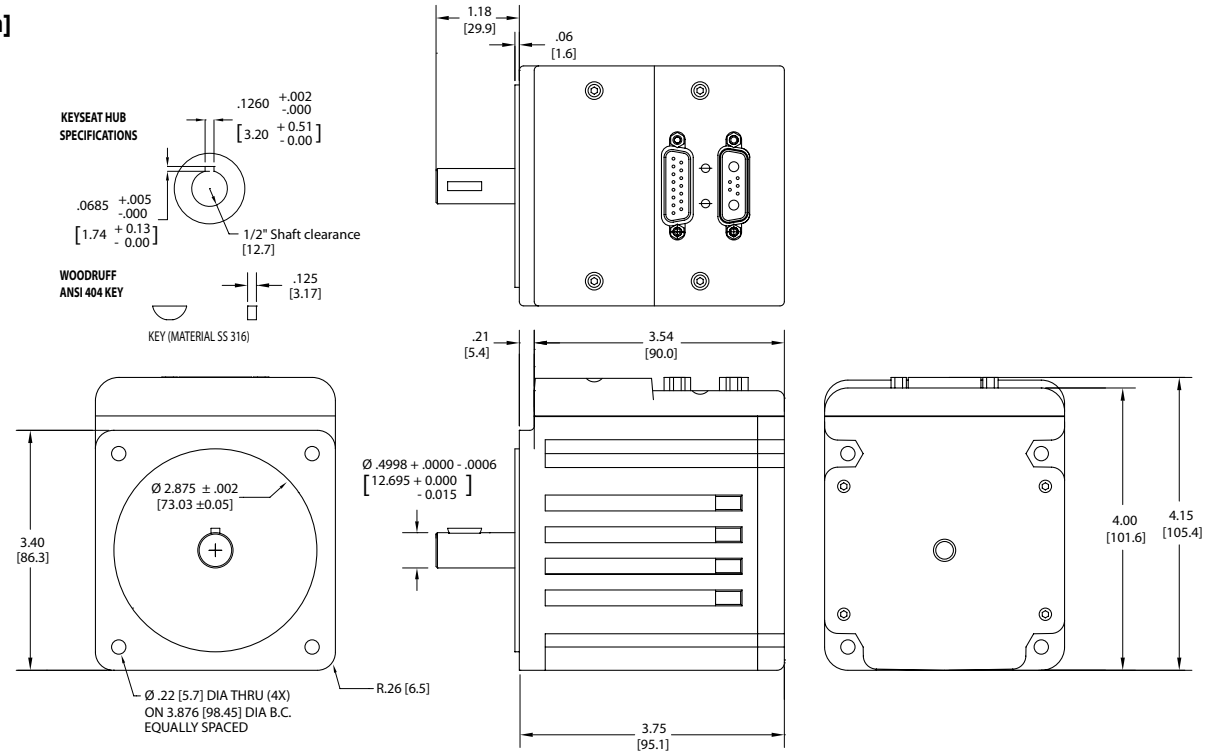

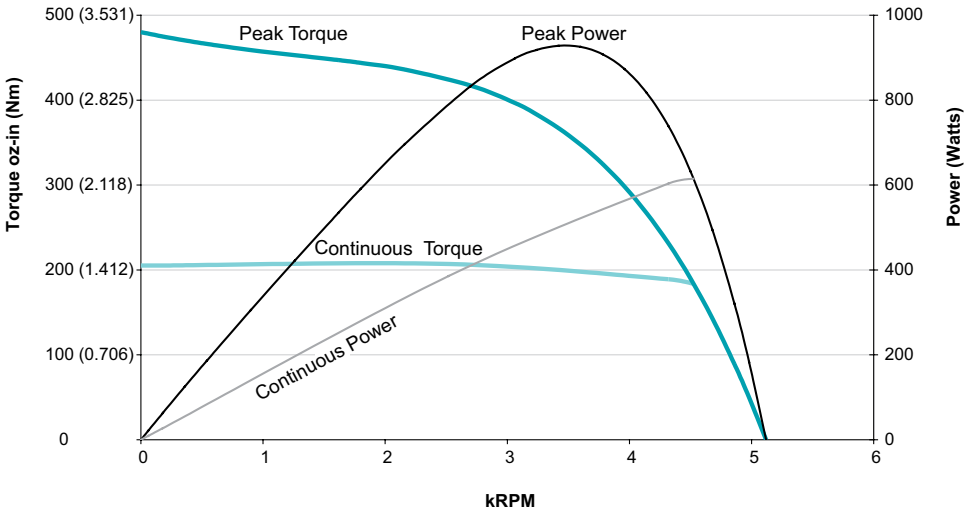

SM3416DT-PLS2
at 48 VDC
at rise to 85°C

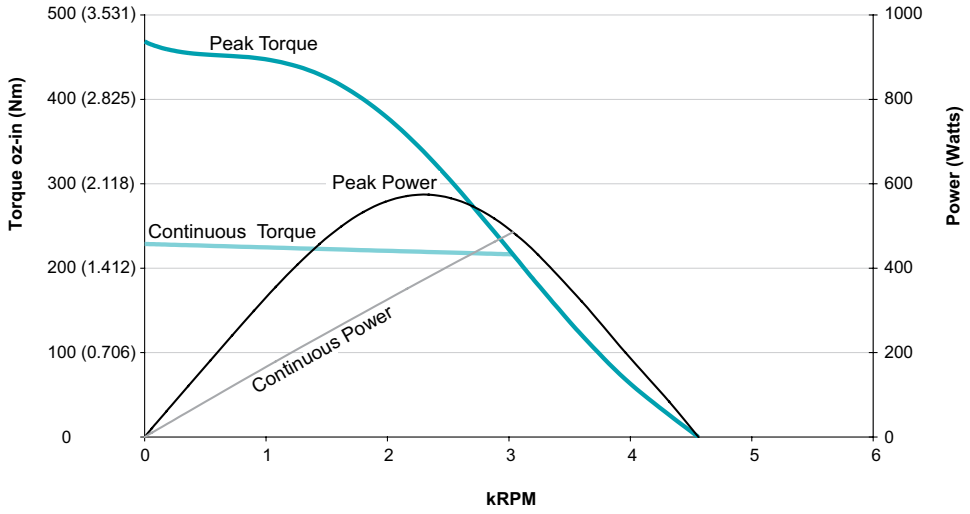

SM3416DT-PLS2
at 42 VDC
at rise to 85°C

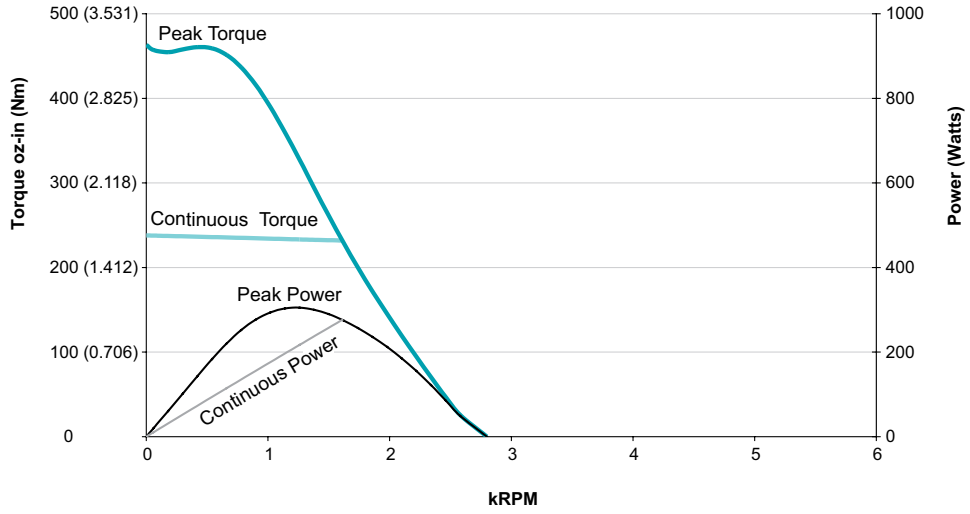

SM3416DT-PLS2
at 24 VDC
at rise to 85°C

SM3420D-PLS2		
Continuous Torque	7.91	in-lb
	126	oz-in
	0.89	N-m
Peak Torque	24.91	in-lb
	399	oz-in
	2.81	N-m
Nominal Continuous Power	324	Watt
No Load Speed	4,500	RPM
Continuous Current @ Nominal Power	9.4	Amps
Voltage Constant	10.8	V/kRPM
Winding Resistance	1.2	ohms
Encoder Resolution	8,000	Counts/Rev
Rotor Inertia	0.013	oz-in-sec^2
	9.183	10^{-5} Kg-m^2
Weight	3.5	lb
	1.59	kg
Shaft Diameter	0.375	in
	9.53	mm
Shaft, Radial Load	15	lb
	6.80	kg
Shaft, Axial Thrust Load	3	lb
	1.36	kg
EtherNet Available		
DeviceNet Available	Yes	
ProfiBus Available	Yes	
CanOpen Available		

Animatics SmartMotor SM3420D-PLS2 (No Options) CAD Drawing

in [mm]

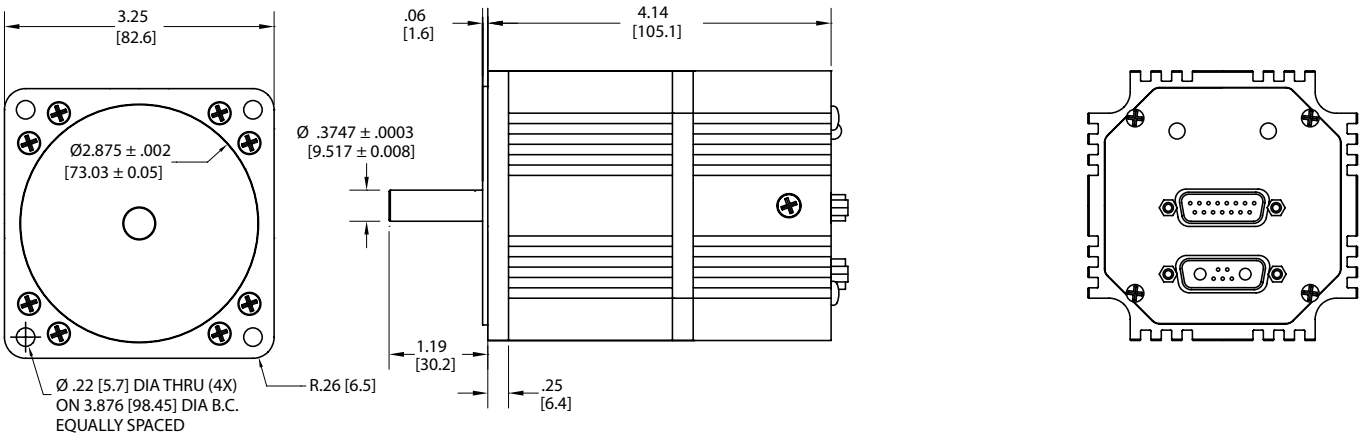

FRONT VIEW SIDE VIEW REAR VIEW

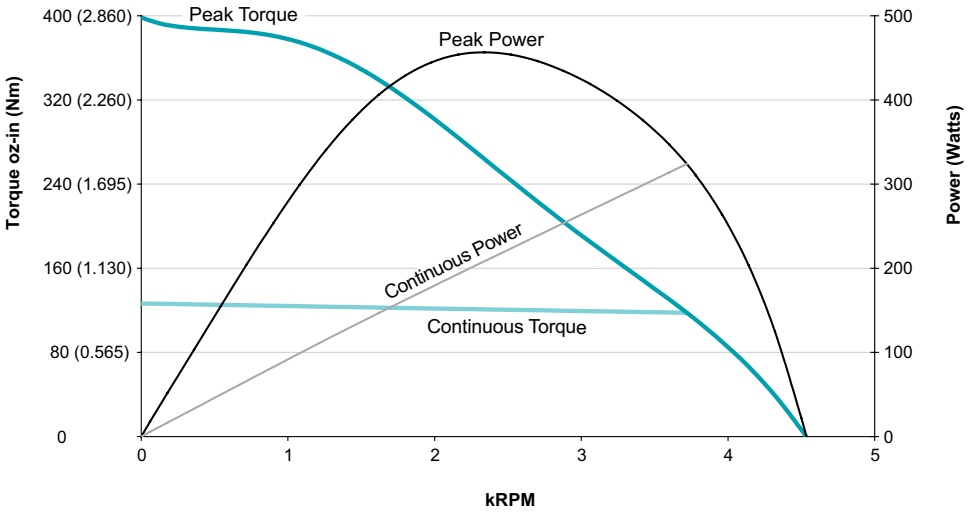

SM3420D-PLS2
at 48 VDC
at rise to 85°C

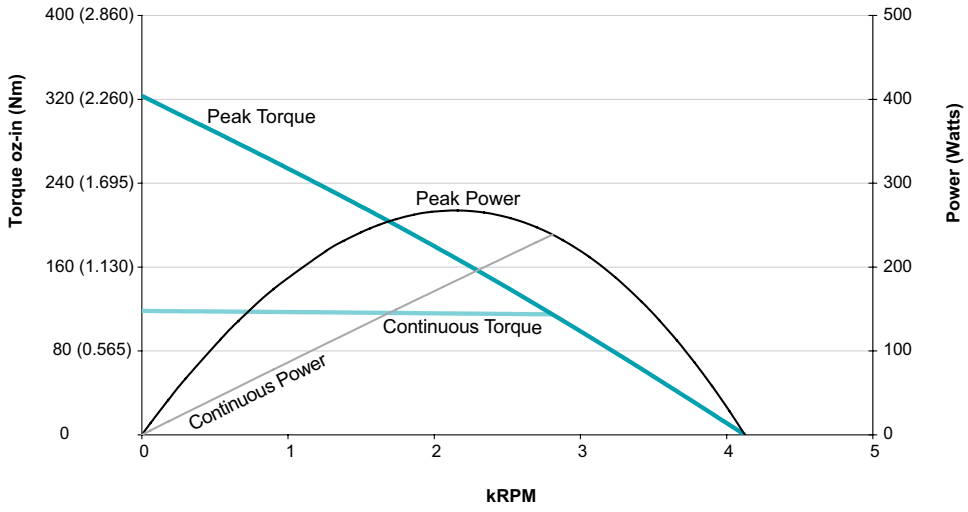

SM3420D-PLS2
at 42 VDC
at rise to 85°C

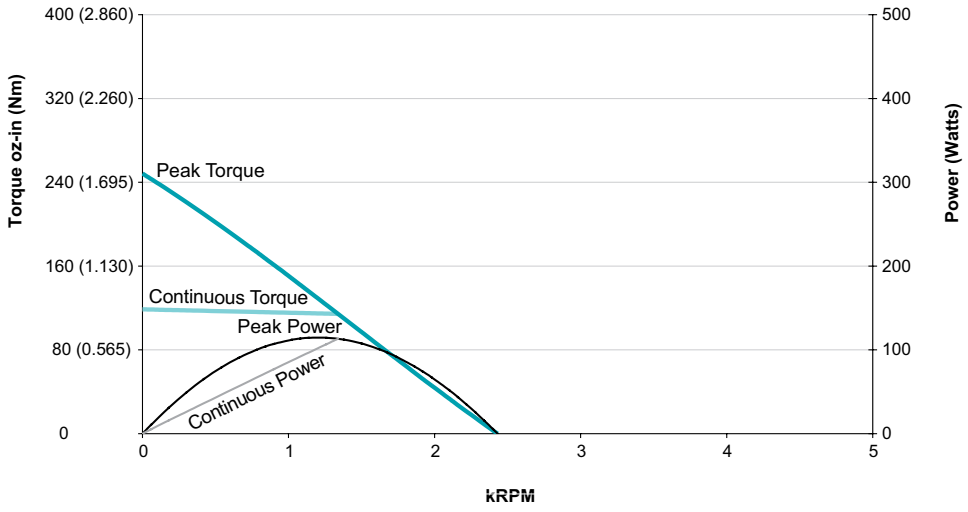

SM3420D-PLS2
at 24 VDC
at rise to 85°C

SM3430D-PLS2		
Continuous Torque	10.87	in-lb
	174	oz-in
	1.23	N-m
Peak Torque	34.75	in-lb
	556	oz-in
	3.93	N-m
Nominal Continuous Power	400	Watt
No Load Speed	4,100	RPM
Continuous Current @ Nominal Power	10.9	Amps
Voltage Constant	12.1	V/kRPM
Winding Resistance	0.9	ohms
Encoder Resolution	8,000	Counts/Rev
Rotor Inertia	0.019	oz-in-sec^2
	13.422	10^{-5} Kg-m^2
Weight	4.5	lb
	2.04	kg
Shaft Diameter	0.375	in
	9.53	mm
Shaft, Radial Load	15	lb
	6.80	kg
Shaft, Axial Thrust Load	3	lb
	1.36	kg
EtherNet Available		
DeviceNet Available	Yes	
ProfiBus Available	Yes	
CanOpen Available		

Animatics SmartMotor SM3430D-PLS2 (No Options) CAD Drawing

in [mm]

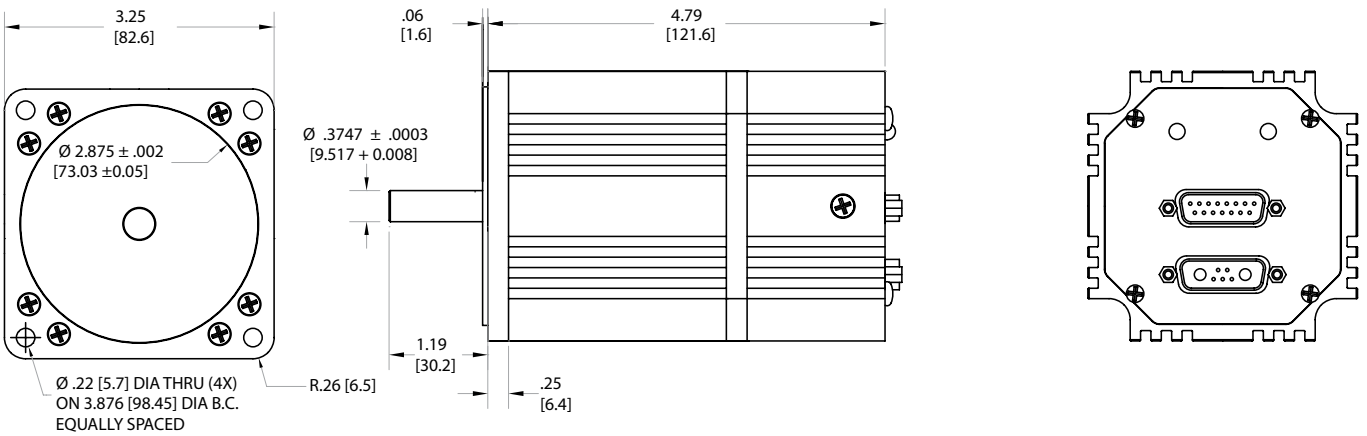

FRONT VIEW SIDE VIEW REAR VIEW

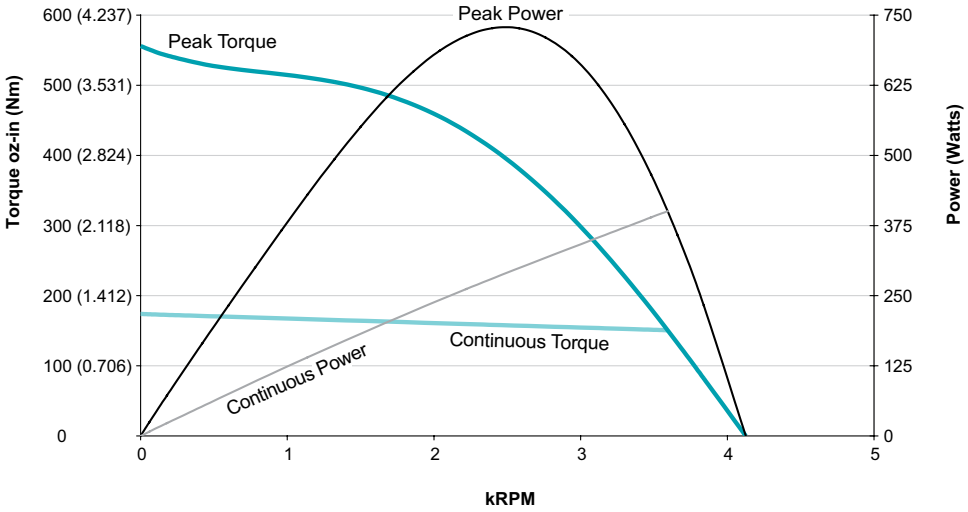

SM3430D-PLS2
at 48 VDC
at rise to 85°C

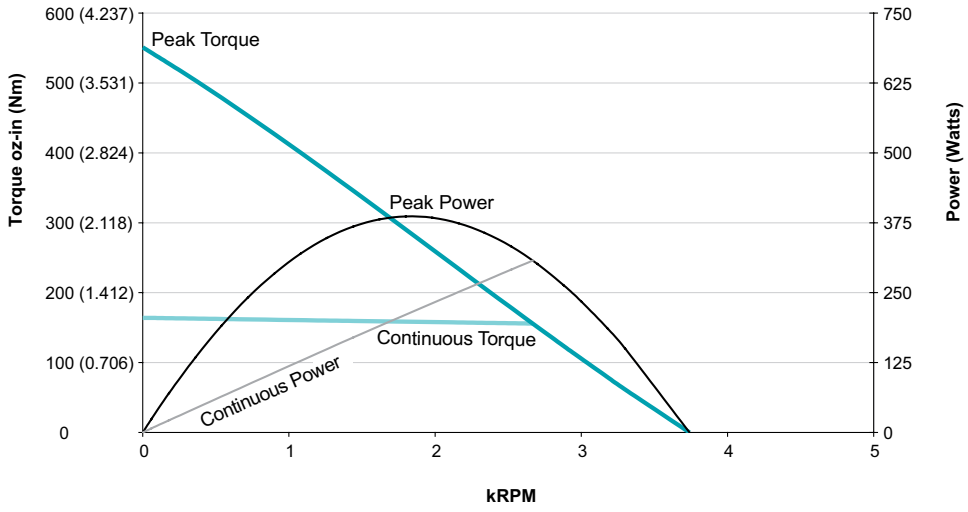

SM3430D-PLS2
at 42 VDC
at rise to 85°C

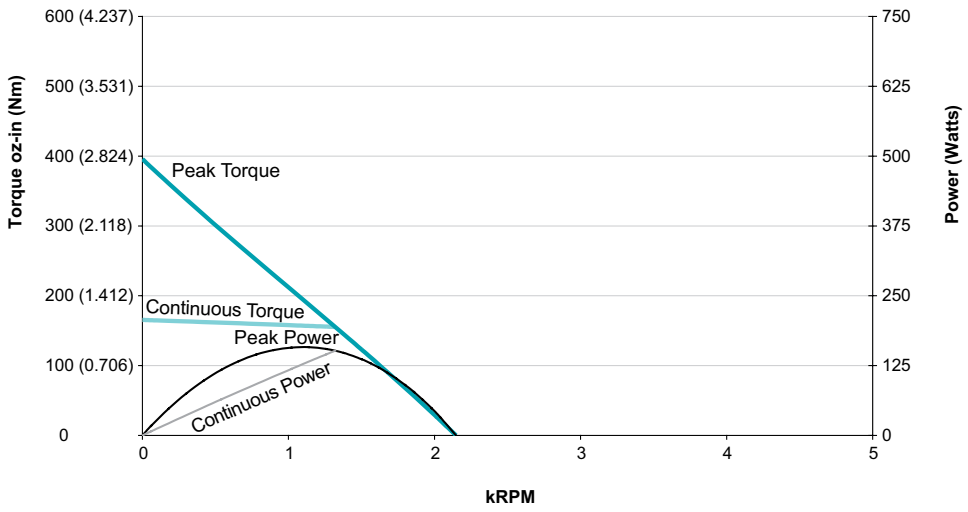

SM3430D-PLS2
at 24 VDC
at rise to 85°C

SM3440D-PLS2		
Continuous Torque	12.94	in-lb
	207	oz-in
	1.46	N-m
Peak Torque	40.38	in-lb
	646	oz-in
	4.56	N-m
Nominal Continuous Power	438	Watt
No Load Speed	3,800	RPM
Continuous Current @ Nominal Power	11.6	Amps
Voltage Constant	12.9	V/kRPM
Winding Resistance	0.6	ohms
Encoder Resolution	8,000	Counts/Rev
Rotor Inertia	0.025	oz-in-sec^2
	17.660	10^{-5} Kg-m^2
Weight	5.5	lb
	2.49	kg
Shaft Diameter	0.375	in
	9.53	mm
Shaft, Radial Load	15	lb
	6.80	kg
Shaft, Axial Thrust Load	3	lb
	1.36	kg
EtherNet Available		
DeviceNet Available	Yes	
ProfiBus Available	Yes	
CanOpen Available		

Animatics SmartMotor SM3440D-PLS2 (No Options) CAD Drawing

in [mm]

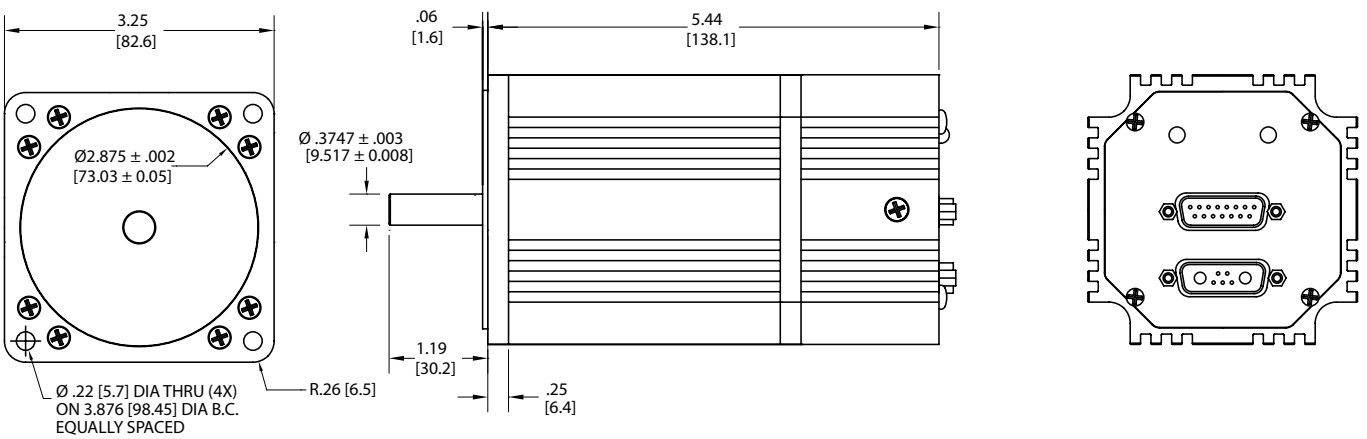

FRONT VIEW SIDE VIEW REAR VIEW

Animatics Corporation • All integrated motor products made by Animatics are covered by patent number 5,912,541

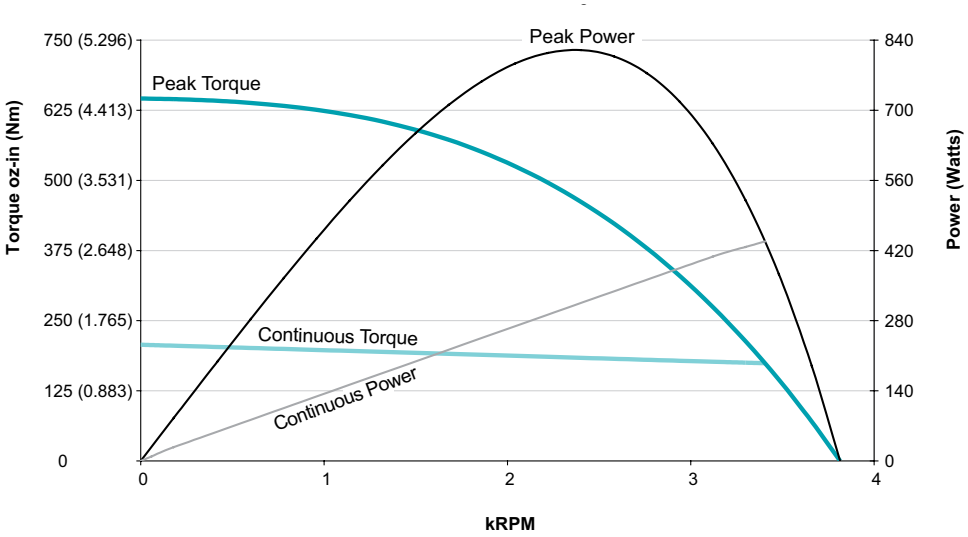

SM3440D-PLS2
at 48 VDC
at rise to 85°C

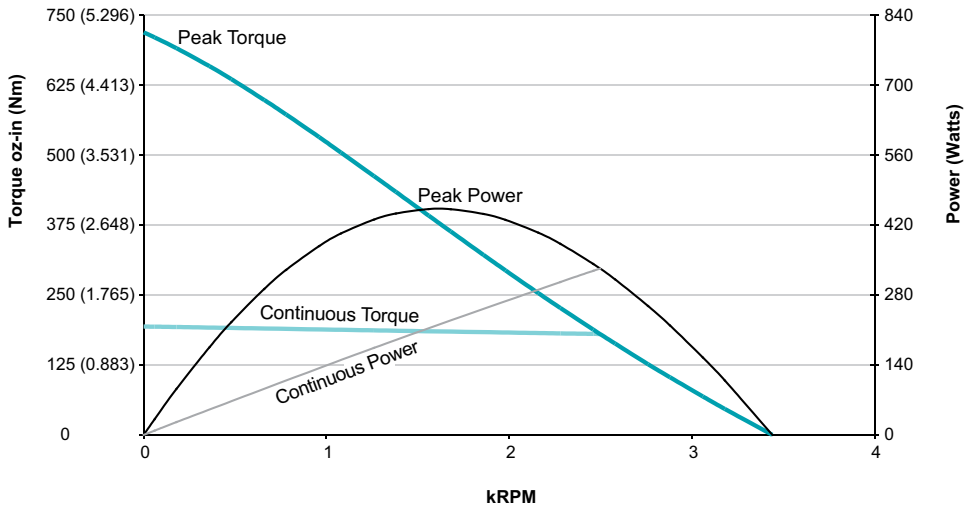

SM3440D-PLS2
at 42 VDC
at rise to 85°C

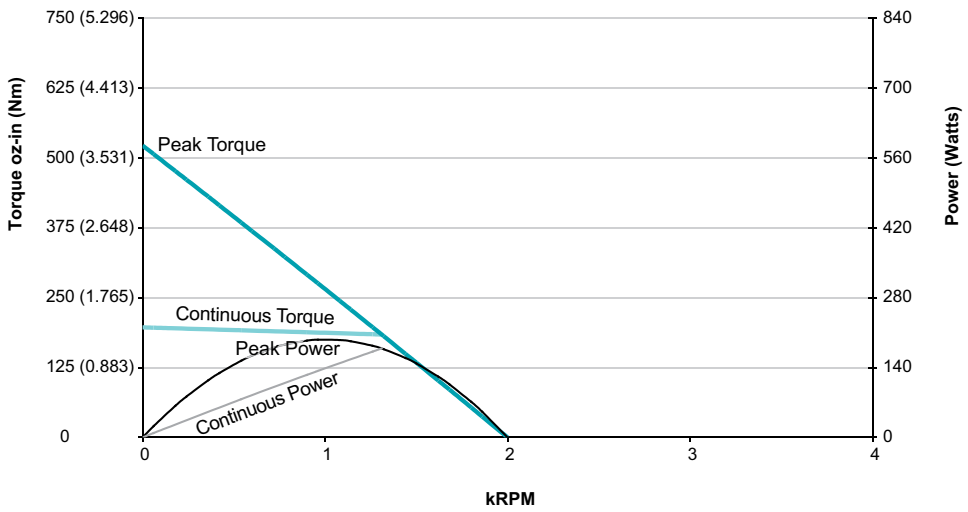

SM3440D-PLS2
at 24 VDC
at rise to 85°C

SM3440D-PLS2		
Continuous Torque	16.34	in-lb
	261	oz-in
	1.85	N-m
Peak Torque	48.19	in-lb
	771	oz-in
	5.44	N-m
Nominal Continuous Power	527	Watt
No Load Speed	3,300	RPM
Continuous Current @ Nominal Power	14.1	Amps
Voltage Constant	13.7	V/kRPM
Winding Resistance	0.6	ohms
Encoder Resolution	8,000	Counts/Rev
Rotor Inertia	0.03	oz-in-sec^2
	21.192	10^{-5} Kg-m^2
Weight	6.5	lb
	2.95	kg
Shaft Diameter	0.375	in
	9.53	mm
Shaft, Radial Load	15	lb
	6.80	kg
Shaft, Axial Thrust Load	3	lb
	1.36	kg
EtherNet Available		
DeviceNet Available	Yes	
ProfiBus Available	Yes	
CanOpen Available		

Animatics SmartMotor SM3450D-PLS2 (No Options) CAD Drawing

in [mm]

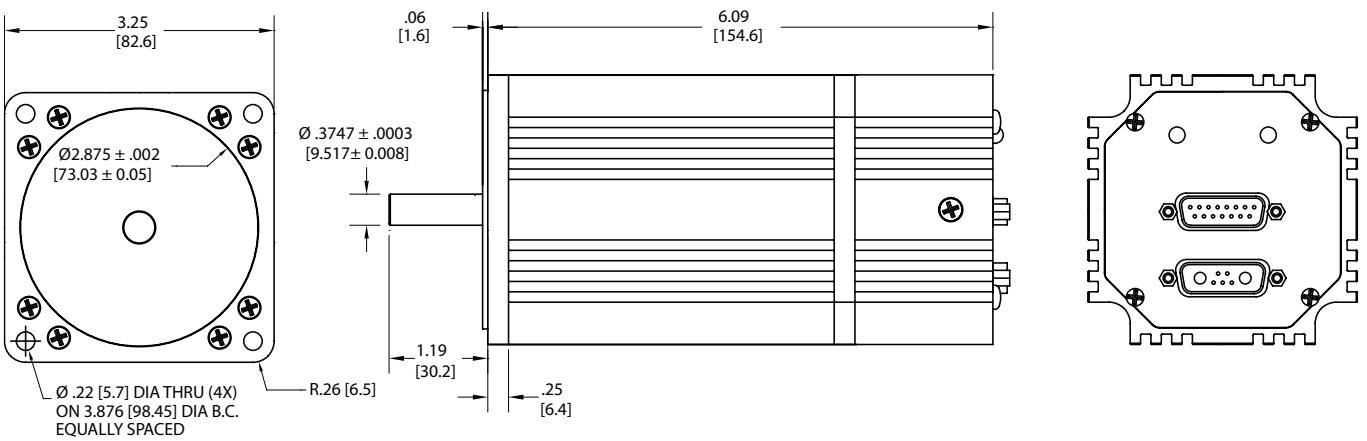

FRONT VIEW SIDE VIEW REAR VIEW

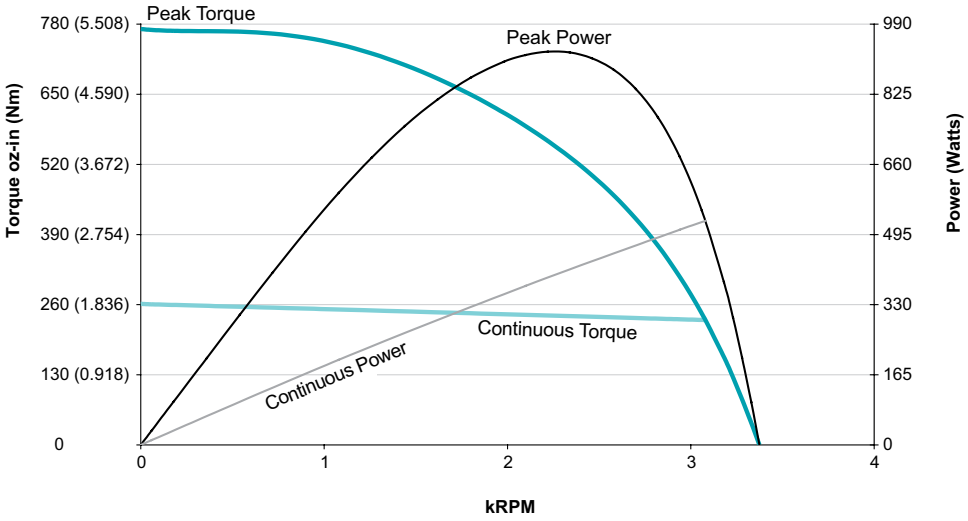

SM3450D-PLS2
at 48 VDC
at rise to 85°C

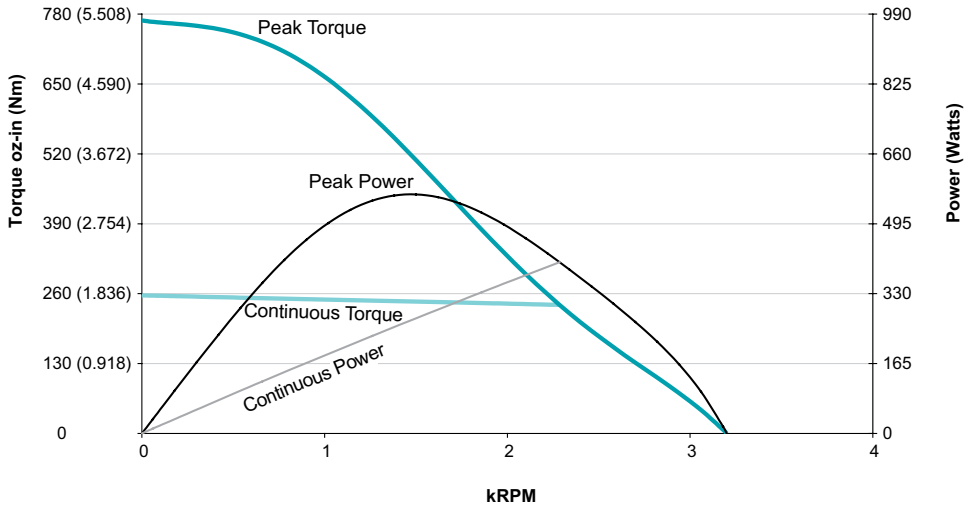

SM3450D-PLS2
at 42 VDC
at rise to 85°C

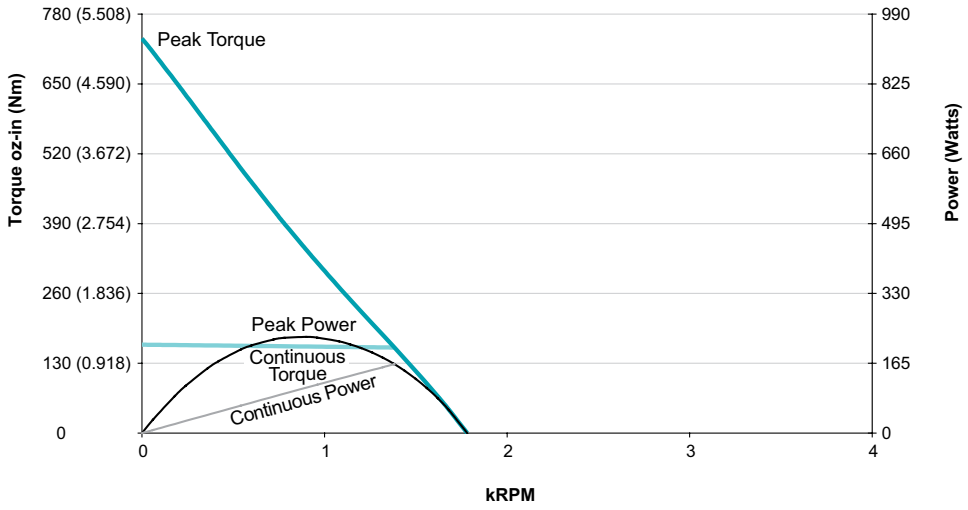

SM3450D-PLS2
at 24 VDC
at rise to 85°C

CANopen

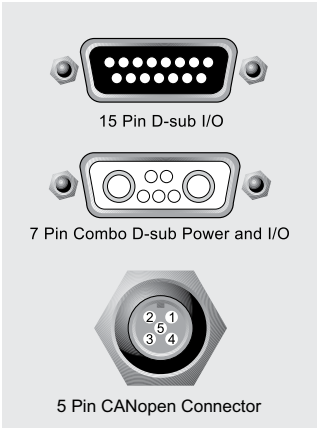

CANopen Pinout:

1 Not Connected
2 Not Connected
3 CAN ground
4 CAN H
5 CAN L

Animatics CANOpen SmartMotor™

Features Include:

- All Basic Motion commands available via CiA V4.02 specification
- Ability to read/write all SmartMotor variables
- Use of onboard I/O via CANOpen Gateway, SmartMotor program, or RS232 commands
- Ability to run 1000 SmartMotor subroutines via CANOpen
- Online diagnostics of the SmartMotors via SMI2 software and RS232 connection
- Up to 127 nodes
- 250 micro second interrupt driven subroutine with the -PLS firmware
- Gateway Baud Rates: 20K, 50K, 125K, 250K, 500K, 1Mpbs
  default 125Kbps

I/O Ports E and F are used for communications between the SmartMotor and the CANOpen Gateway.

Note: This option DOES NOT apply to all Models, please see comparison chart on center foldout for availability.

DeviceNet™

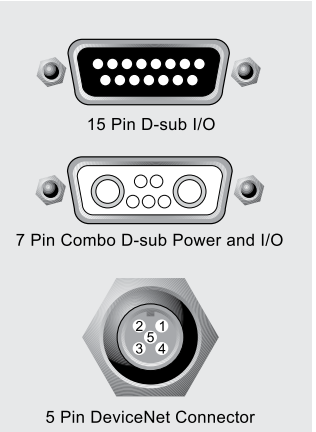

DeviceNet Pinout:

1 Not Connected
2 +24V
3 Common
4 CAN H
5 CAN L

ODVA™

Animatics DeviceNet SmartMotor™

Features Include:

- Polled I/O and Explicit Messages from your PLC to control all SmartMotor operation
- Read/Write control over all ODVA Position Controller parameters
- Use of onboard I/O via DeviceNet, SmartMotor program, or RS232 commands
- Ability to run 1000 SmartMotor subroutines via DeviceNet and read/write four 32-bit user variables
- Online diagnostics of the SmartMotors via SMI2 software and RS232 connection
- Up to 64 DeviceNet nodes
- 250 micro second interrupt driven subroutine with the -PLS firmware
- Gateway Baud Rates: 125K, 250K, 500K
  default 125Kbps

I/O Ports E and F are used for communications between the SmartMotor and the DeviceNet Gateway.

Note: DeviceNet motors ship with PLS2 firmware in the SM3420, SM3430, SM3440, and SM3450 sizes only. Any others ship with PLS firmware. Please consult with the factory for full availability.

Note: This option DOES NOT apply to all Models, please see comparison chart on center foldout for availability.

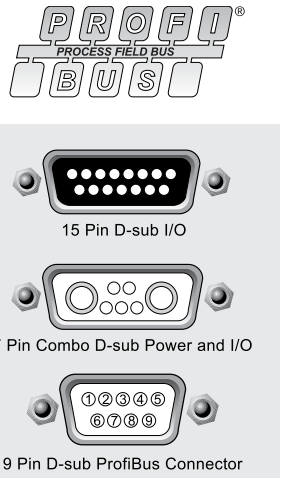

ProfiBus Pinout:

1	NC	6	+5V
2	NC	7	NC
3	BUS-B	8	BUS-A
4	NC	9	NC
5	ground		

Animatics ProfiBus SmartMotor™

Features Include:

- Command/Response Codes for all Version 4 SmartMotor commands
- Use of onboard I/O via ProfiBus, SmartMotor program, or RS232 commands
- Ability to run 1000 SmartMotor subroutines via ProfiBus
- Ability to read/write all SmartMotor variables
- Online diagnostics of the SmartMotors via SMI2 software and RS232 connection
- Up to 127 ProfiBus nodes
- 250 micro second interrupt driven subroutine with the –PLS firmware
- Gateway Baud Rates: default 1.5Mbps
  9.6, 19.2, 31.25, 45.45, 93.75, 187.5, 500 kbps,
  1.5, 3, 6, 12 Mbps

I/O Ports E and F are used for communications between the SmartMotor and the ProfiBus Gateway.

Note: ProfiBus baud rates are achievable only with proper cable length and termination connectors. There is a minimum cable length when operating >=1MBaud. If the cable is too short, reflected impedance can cause loss of communications data packets and spurious node errors.

Note: ProfiBus motors ship with PLS2 firmware in the SM3420, SM3430, SM3440, and SM3450 sizes only. Any others ship with PLS firmware. Please consult with the factory for full availability.

Ethernet

Ethernet Pinout

1	Tx+	5	NC
2	Tx-	6	Rx-
3	Rx+	7	NC
4	NC	8	NC

Animatics Ethernet SmartMotor™

Features Include:

- All SmartMotor commands and capabilities fully implemented via Ethernet
- Standard TCP/IP ASCII over Ethernet protocol via port 10001
- Use of onboard I/O via Ethernet Gateway, SmartMotor program, or RS232 commands
- Ability to run 1000 SmartMotor subroutines via Ethernet
- Online diagnostics of the SmartMotors via SMI2 software and RS232 connection
- Capable of DHCP addressing or Static IP address
- 250 micro second interrupt driven subroutine with the -PLS firmware
- Gateway Baud Rates:10/100 BASE-T auto-detected

I/O Ports E and F are used for communications between the SmartMotor and the Ethernet Gateway.

Note: This option DOES NOT apply to all Models, please see comparison chart for on center foldout availability.

Animatics SmartMotor SM2316D/DT-PLS2 with CANopen

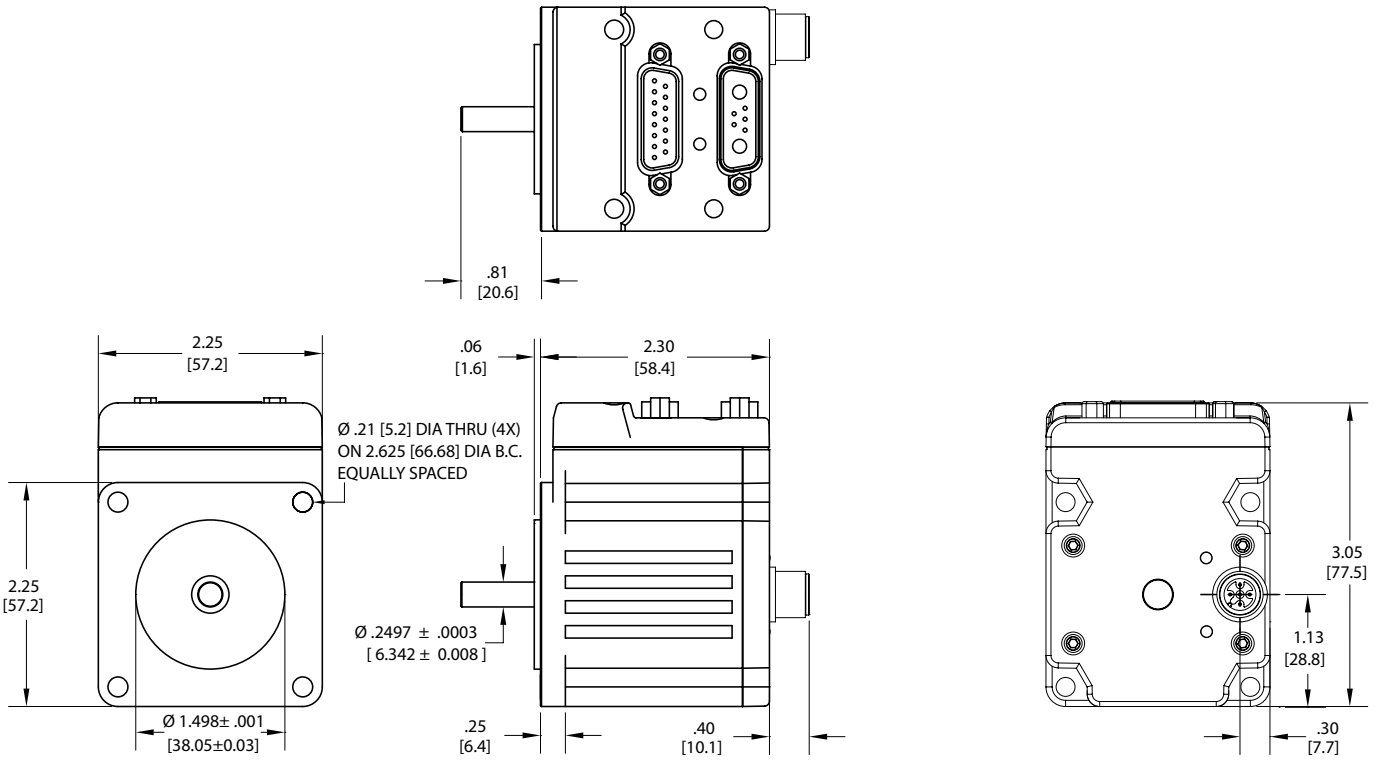

Animatics SmartMotor SM2316D/DT-PLS2 with ProfiBus™

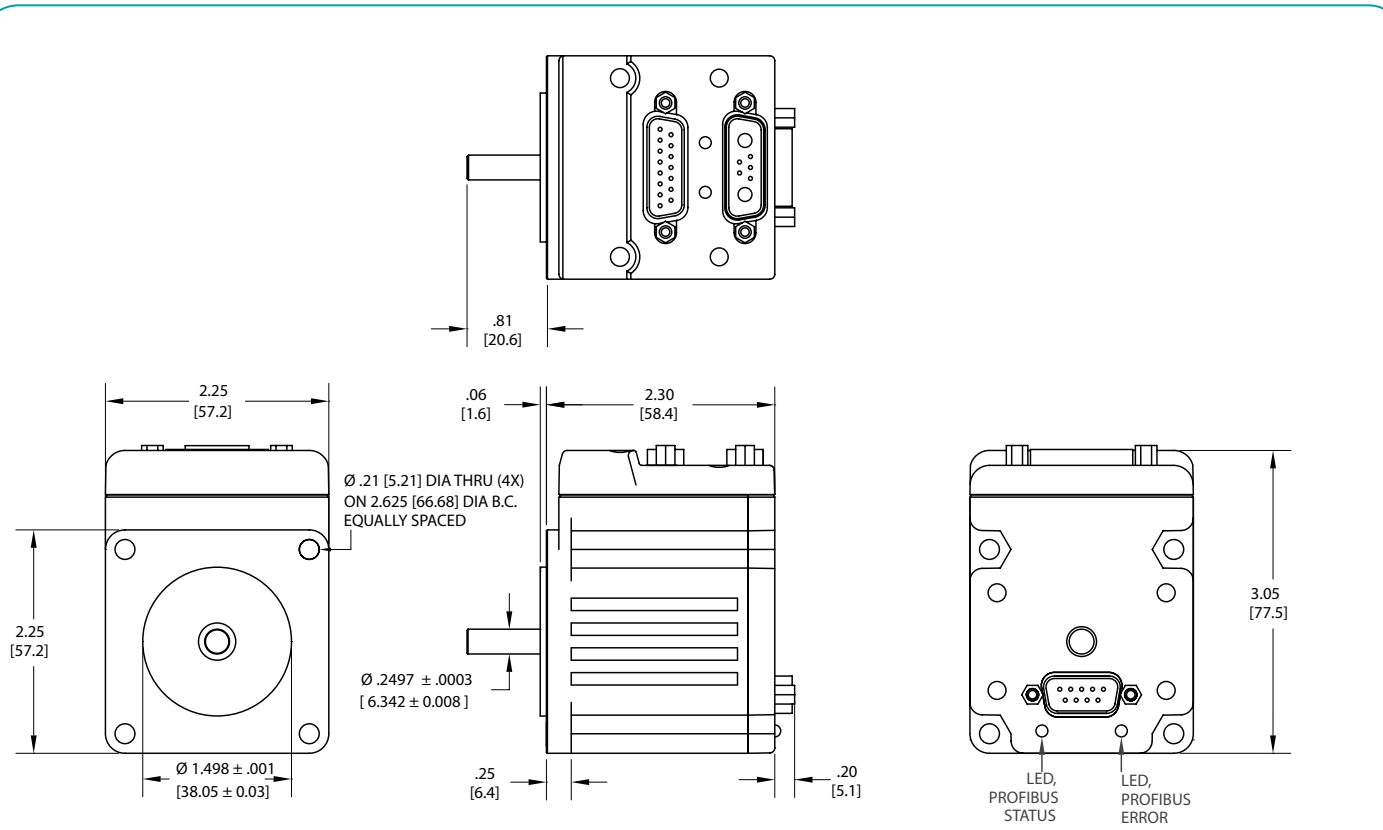

Animatics SmartMotor SM2316D/DT-PLS2 with Ethernet

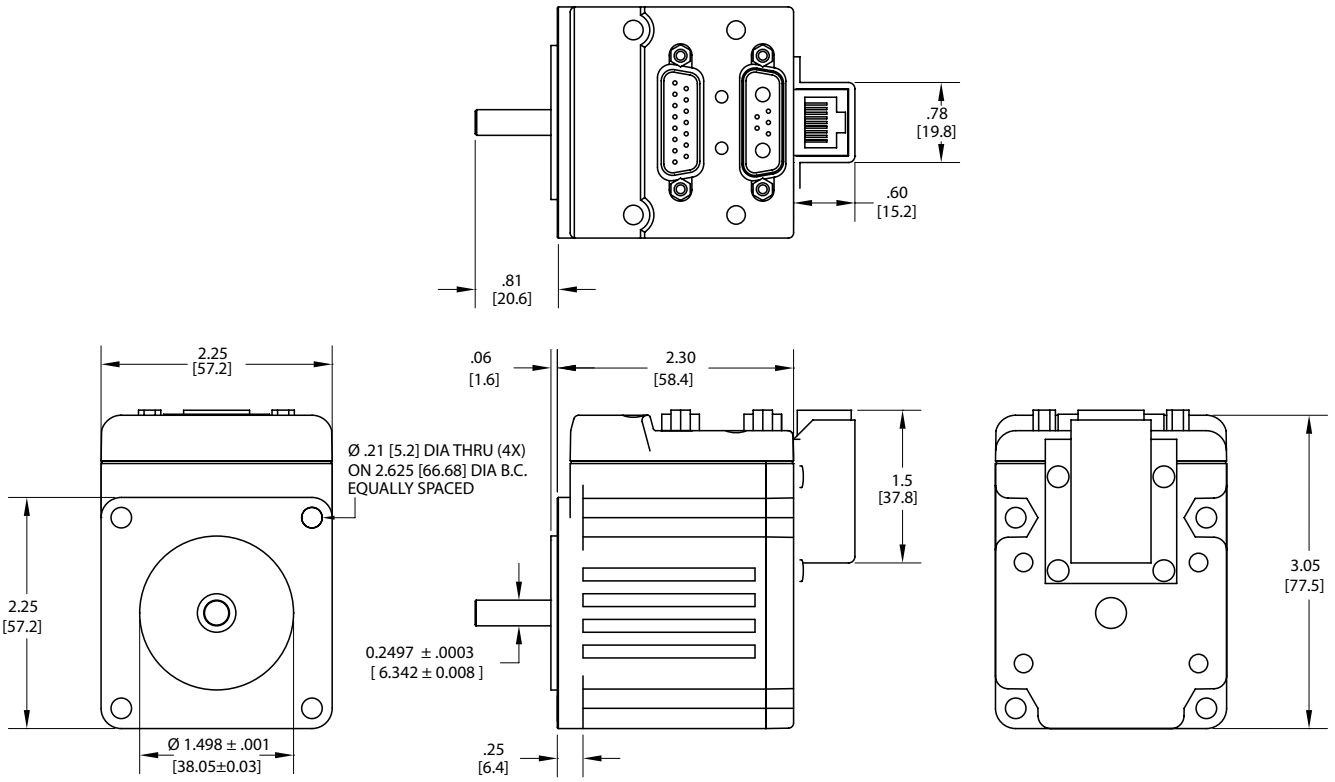

Animatics SmartMotor SM23XXD-PLS with DeviceNet™

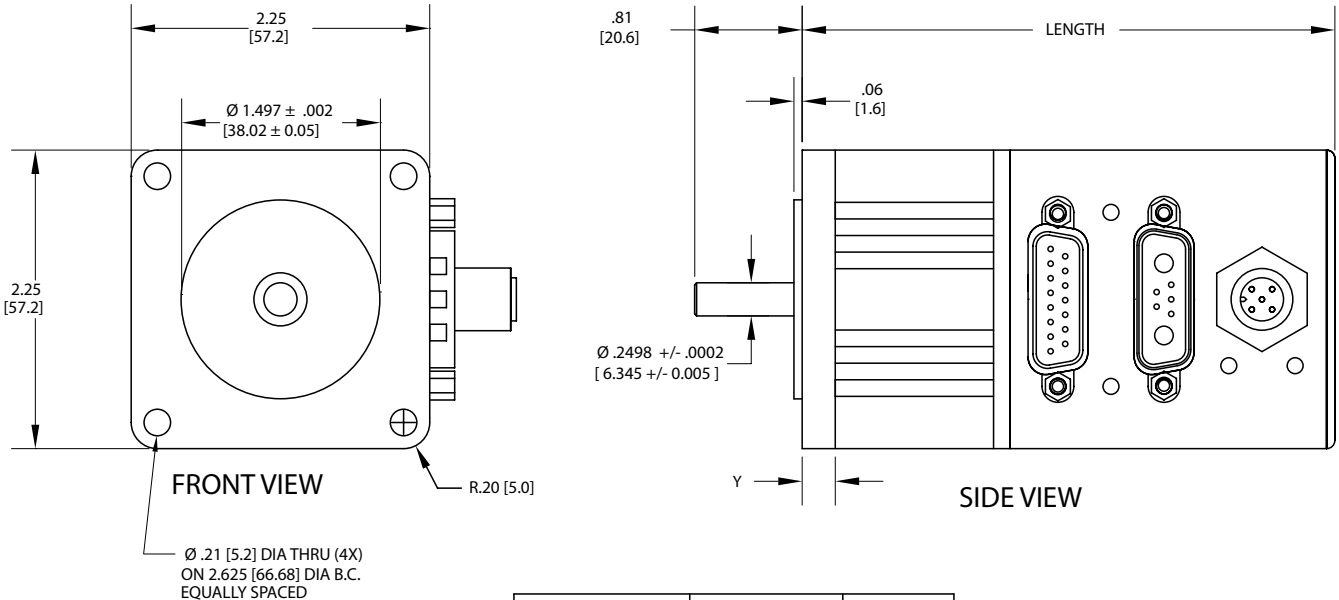

MODEL	LENGTH inches [mm]	"Y" DIM
SM2320D-DN2PLS	4.73 [120.7]	.25 [6.4]
SM2330D-DN2PLS	5.38 [136.7]	
SM2340D-DN2PLS	6.03 [153.6]	
SM2337D-BRK	5.45 [138.4]	.19 [4.8]
SM2337DT-BRK	5.45 [138.4]	

Animatics SmartMotor SM23XXD-PLS with ProfiBus™

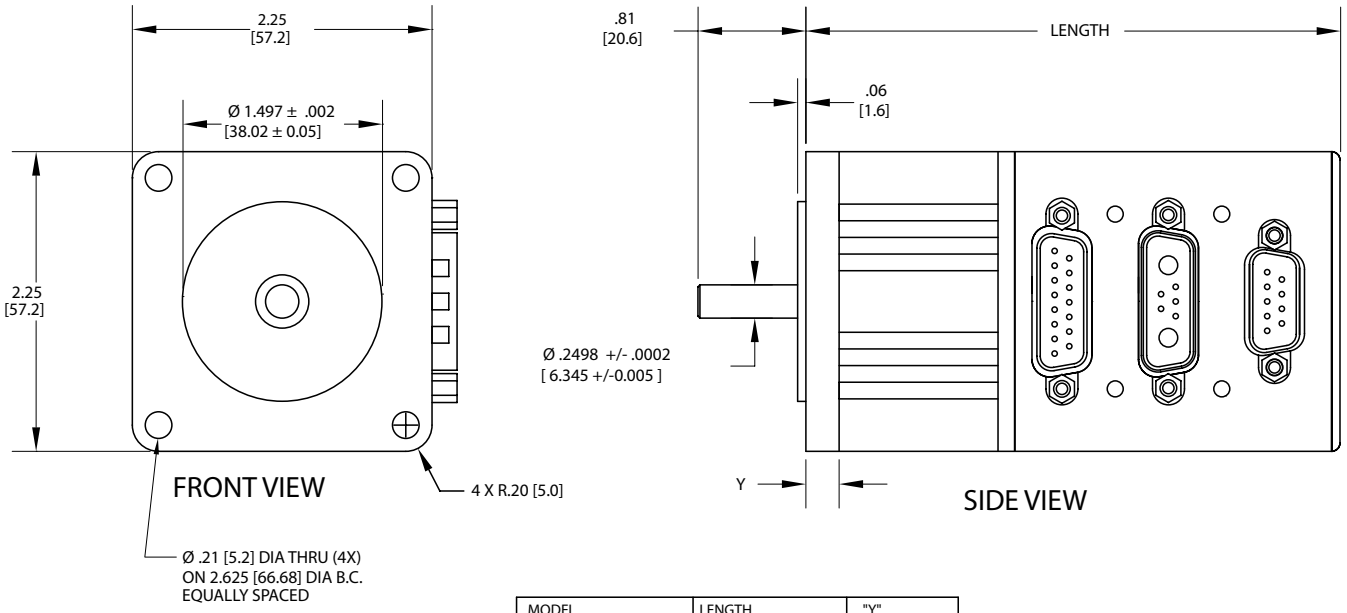

MODEL	LENGTH inches [mm]	"Y" DIM
SM2320D-PB	4.73 [120.6]	0.25 [6.4]
SM2330D-PB	5.38 [136.6]	
SM2340D-PB	6.03 [153.6]	
SM2337D-PB	5.45 [138.4]	0.188 [4.8]
SM2337DT-PB	5.45 [138.4]	

Animatics SmartMotor SM34XXD-PLS2 with DeviceNet™

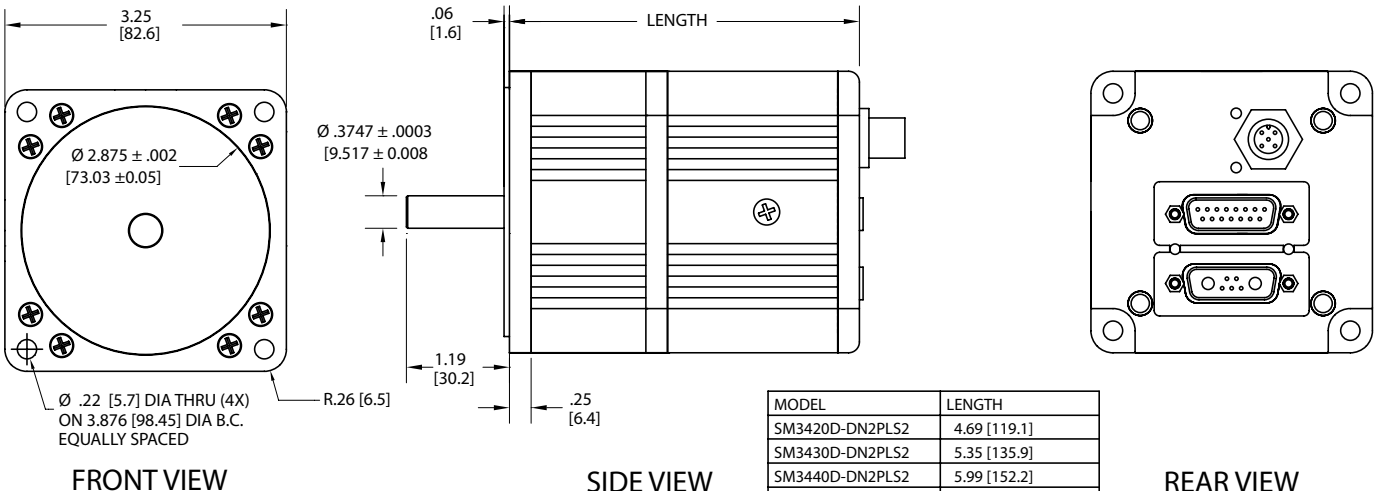

MODEL	LENGTH
SM3420D-DN2PLS2	4.69 [119.1]
SM3430D-DN2PLS2	5.35 [135.9]
SM3440D-DN2PLS2	5.99 [152.2]
SM3450D-DN2PLS2	6.64 [168.7]

Animatics SmartMotor SM34XXD-PLS2 with ProfiBus™

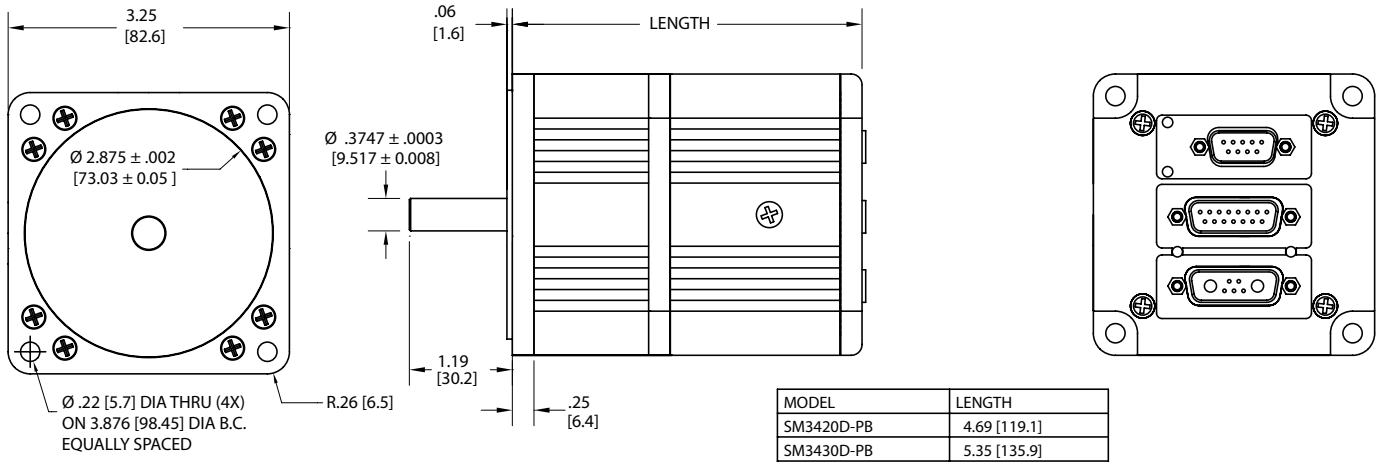

FRONT VIEW

SIDE VIEW

REAR VIEW

MODEL	LENGTH
SM3420D-PB	4.69 [119.1]
SM3430D-PB	5.35 [135.9]
SM3440D-PB	5.99 [152.2]
SM3450D-PB	6.64 [168.7]

Animatics SmartMotor SM34XXD-PLS2 with Ethernet

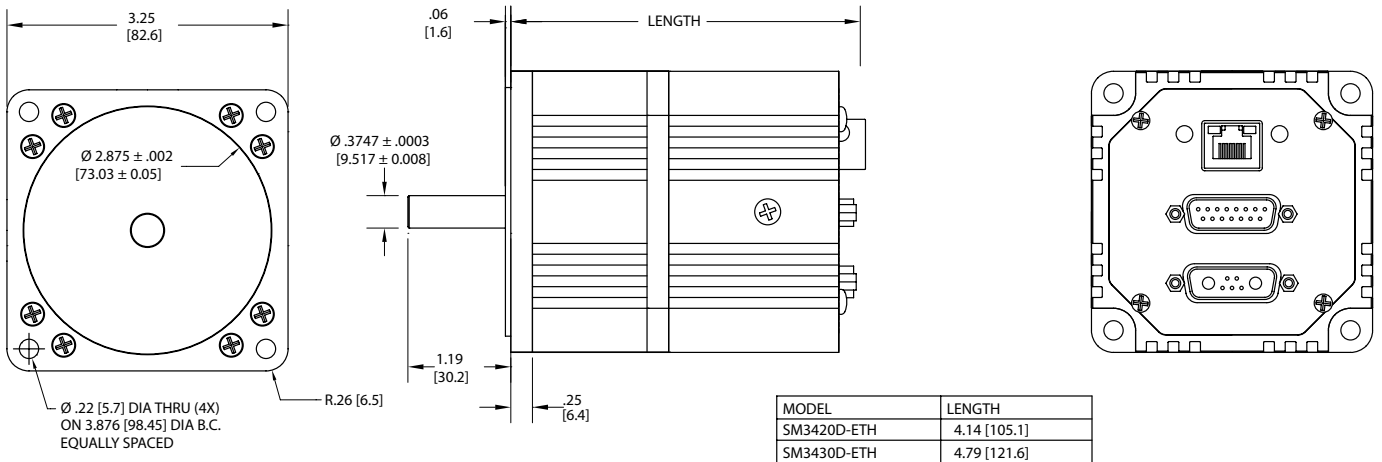

FRONT VIEW

SIDE VIEW

REAR VIEW

MODEL	LENGTH
SM3420D-ETH	4.14 [105.1]
SM3430D-ETH	4.79 [121.6]
SM3440D-ETH	5.44 [138.1]
SM3450D-ETH	6.09 [154.6]

Animatics SmartMotor SM3416D-PLS2 with Ethernet

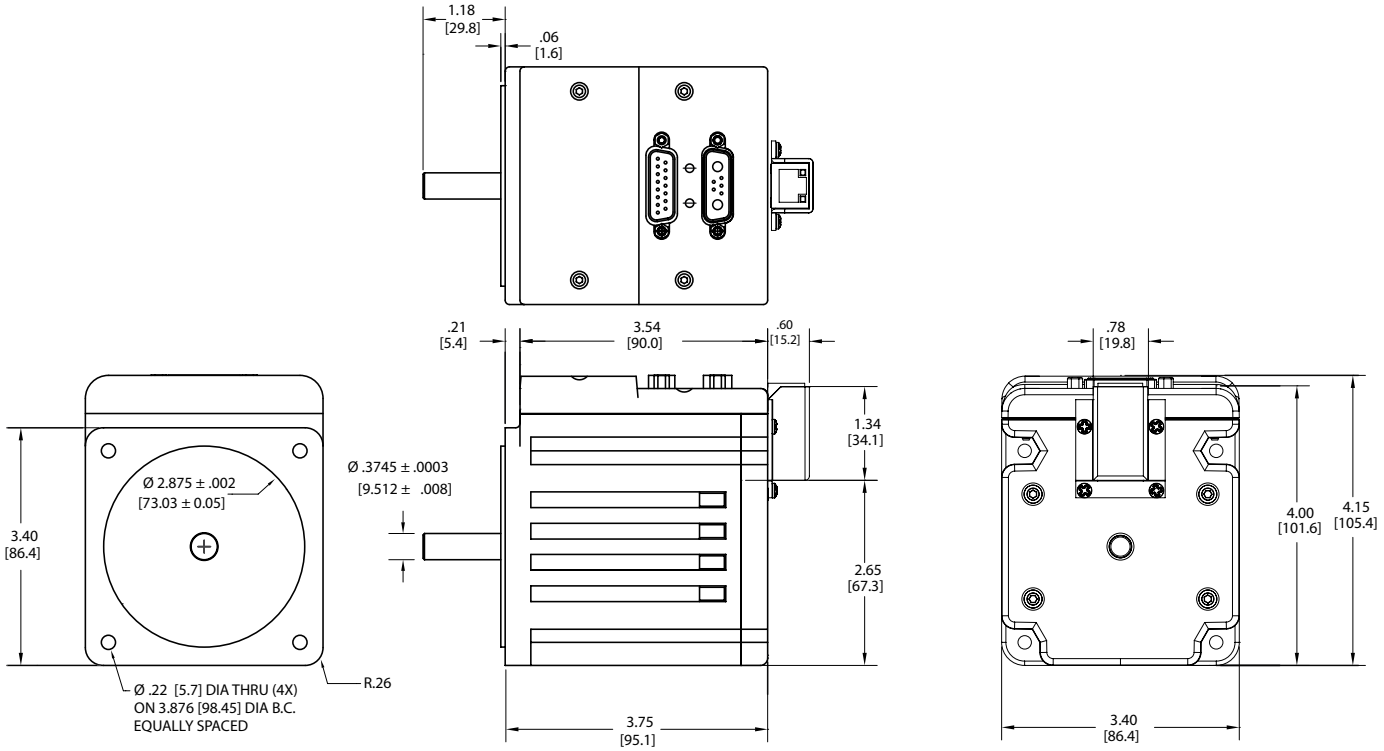

Animatics SmartMotor SM3416DT-PLS2 with Ethernet

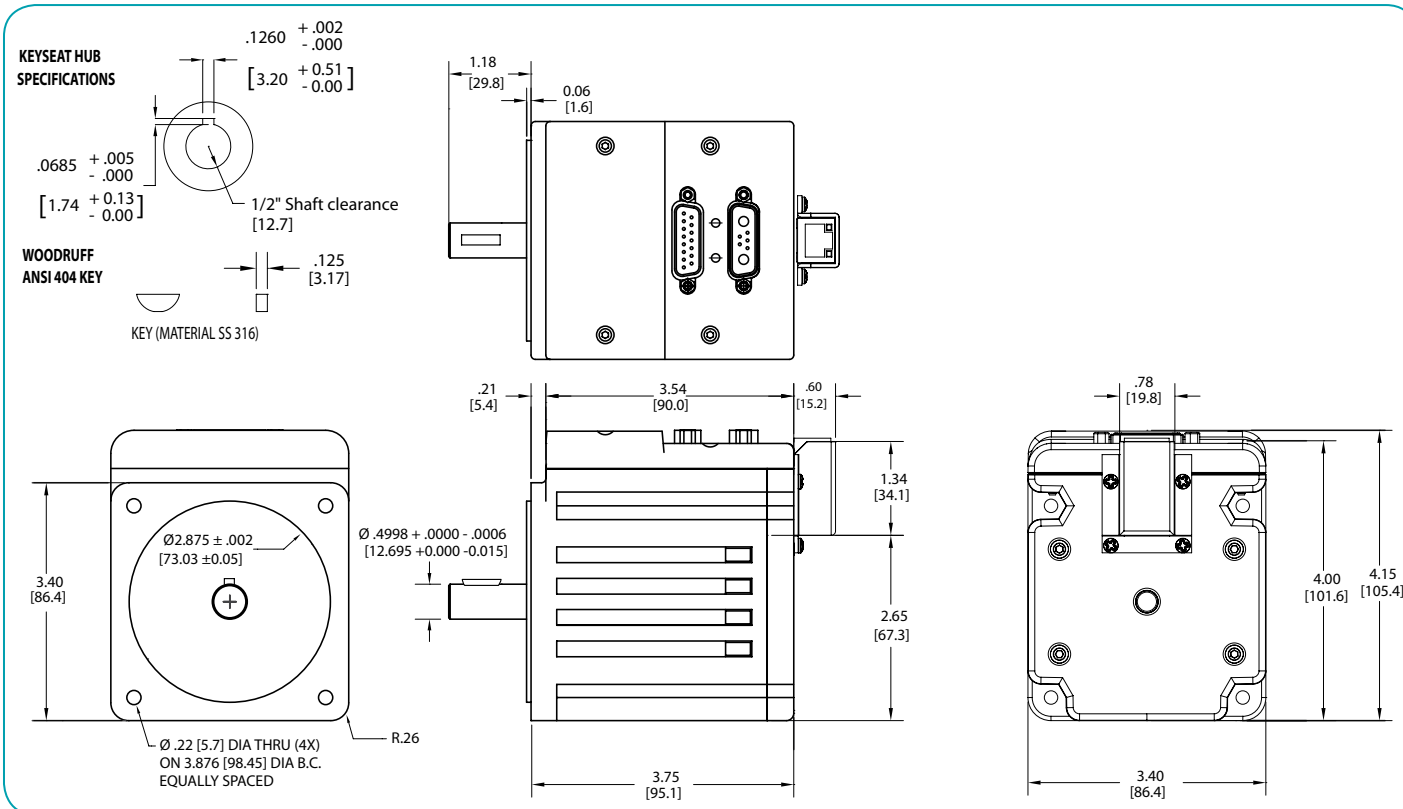

Brake Option Introduction

Animatics offers all Smartmotors™ with an optional brake with the following features:

Fail safe - on loss of drive power, the brake will engage

Internally Powered - no need for extra cables

Zero backlash ! - no loss of position once the load is held in place

Automatic firmware control:

- By default, the brake engages upon any fault condition or drive-off state
- Can disengage while moving and re-engage once stopped automatically

Reasons to use a brake:

- Hold vertical loads on loss of power for safety
- Hold loads from shifting on mobile or moving base machine designs
- Hold position on shut down to not lose position
- Prevent operators from moving loads or equipment while shutdown
- Prevent back drive of any load while the motor is in a fault state or OFF condition

SM2316DT-PLS2 with Ethernet and Brake

Considerations when using a brake:

1. The brake will add length to the motor. Ensure there is adequate axial space for the added length.
2. The brake must have power applied to allow motion, this does add some heat. It may be necessary to operate the brake only under trajectory as described above.
3. If the brake is set to automatically disengage during moves, it will add an audible click at the beginning and end of each move.

⚠ WARNING

- If manual over-ride commands are used to engage the brake, it must be disengaged prior to other moves to avoid damage.
- Excessive back driving of an engaged brake can cause dust build-up resulting in encoder disk contamination and/or permanent damage to the brake disk itself.
- Heavy axial loading can cause improper brake operation. Excessive axial load inward may disengage the brake. Excessive axial load outward may jamb the brake.

Animatics SmartMotor SM1720D-PLS2 with Brake

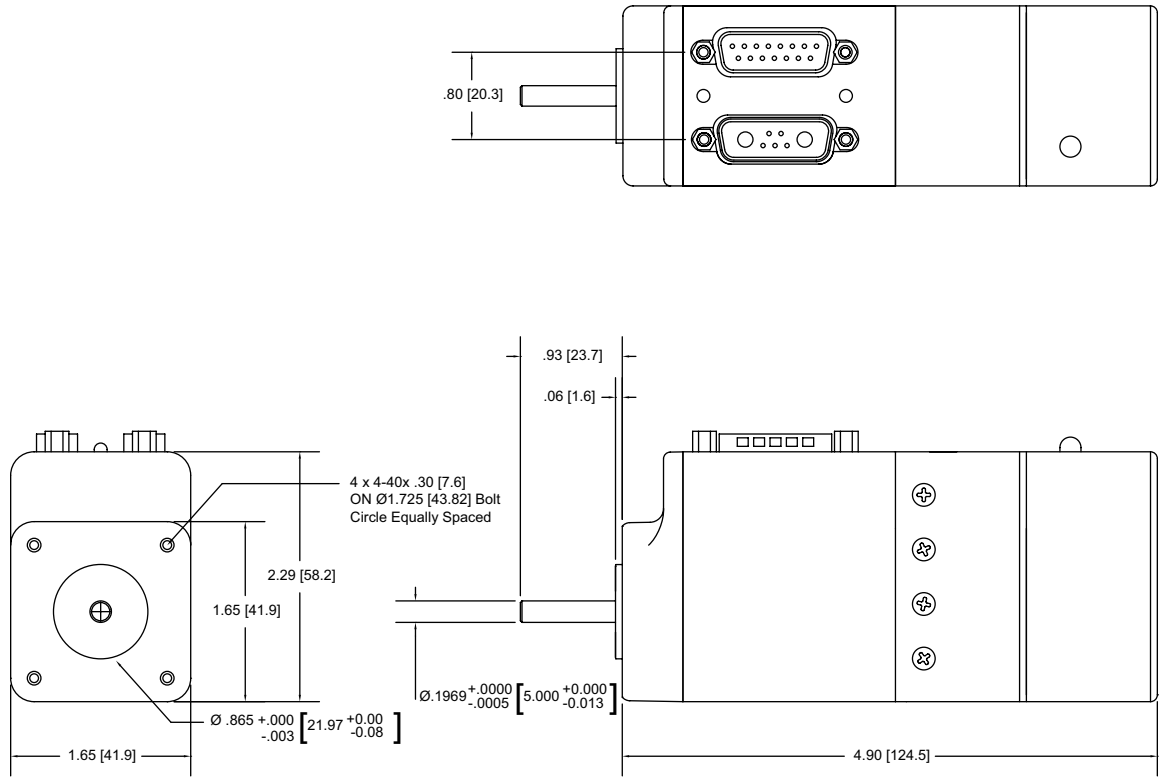

Animatics SmartMotor SM2316D/DT-PLS2 with Brake

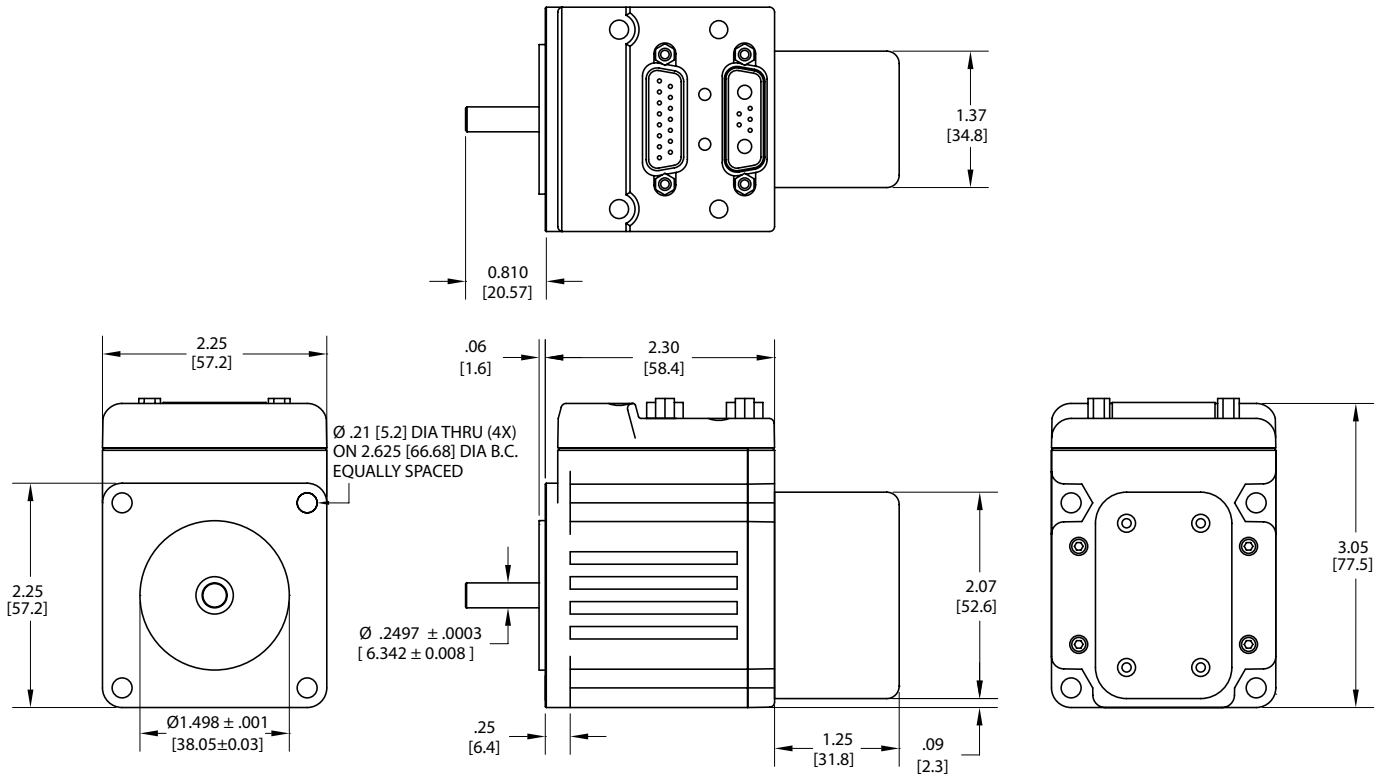

Animatics Corporation • All integrated motor products made by Animatics are covered by patent number 5,912,541

Animatics SmartMotor SM2316D/DT-PLS2 with Brake & Ethernet

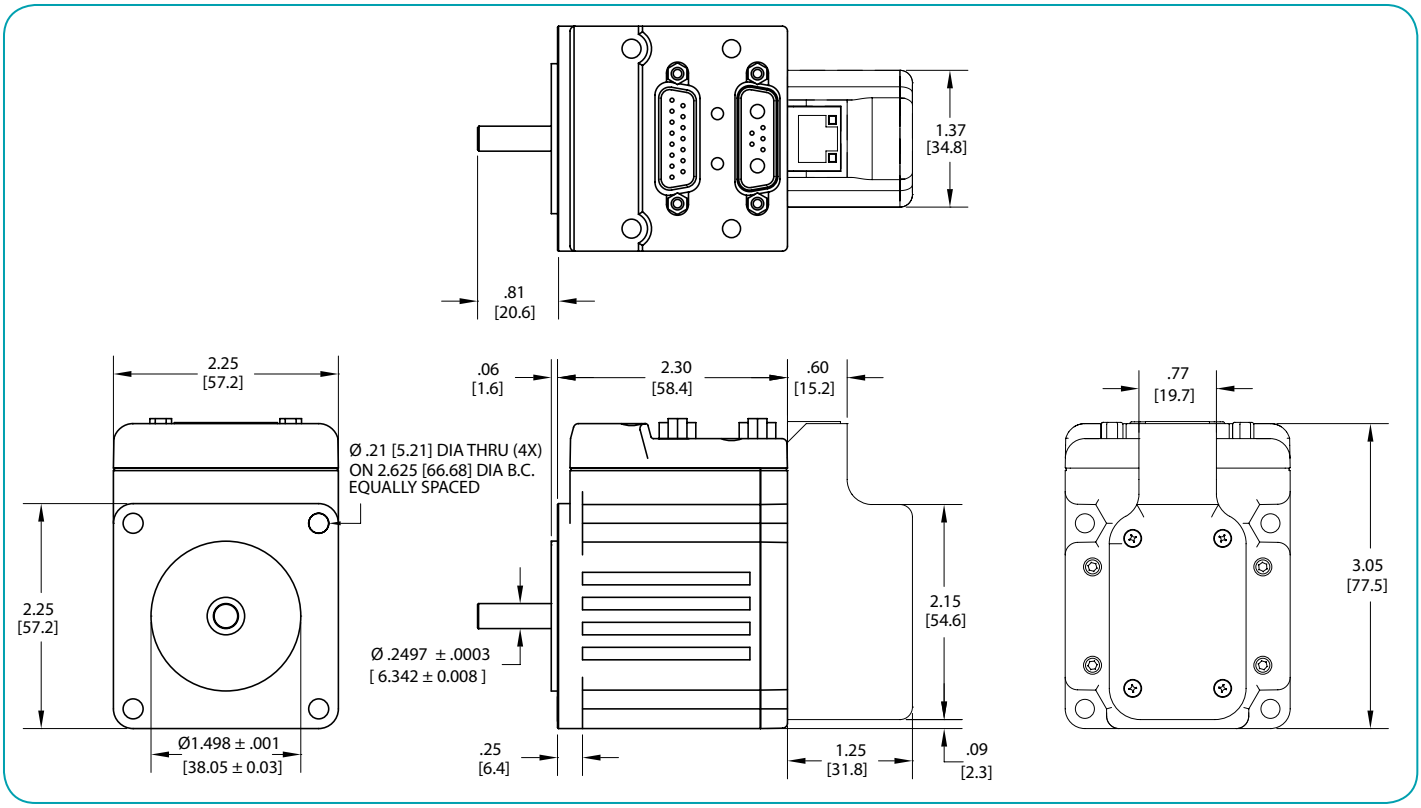

Animatics SmartMotor SM23XXD-PLS2 with Brake

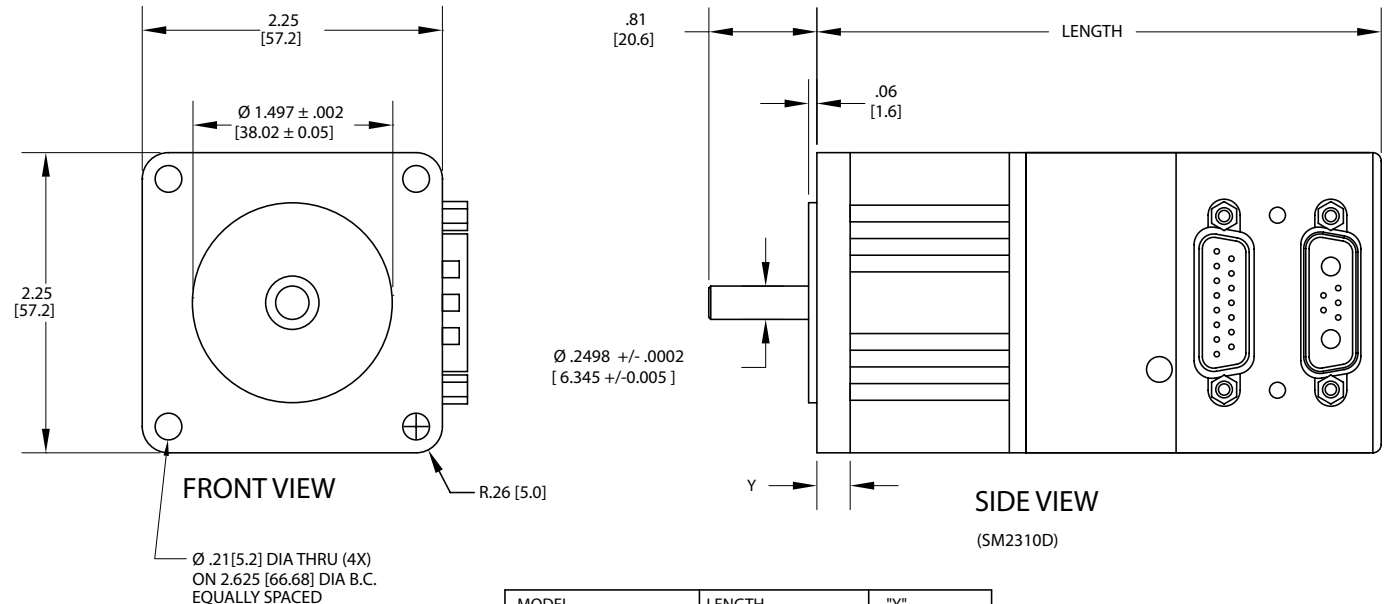

MODEL	LENGTH inches [mm]	"Y" DIM
SM2320D-BRK	4.95 [125.7]	.25 [6.4]
SM2330D-BRK	5.60 [142.2]	
SM2340D-BRK	5.67 [144.0]	
SM2337D-BRK	5.67 [144.0]	0.19 [4.8]
SM2337DT-BRK	6.25 [158.8]	

Animatics SmartMotor SM23XXD-PLS with Brake & Devicenet™

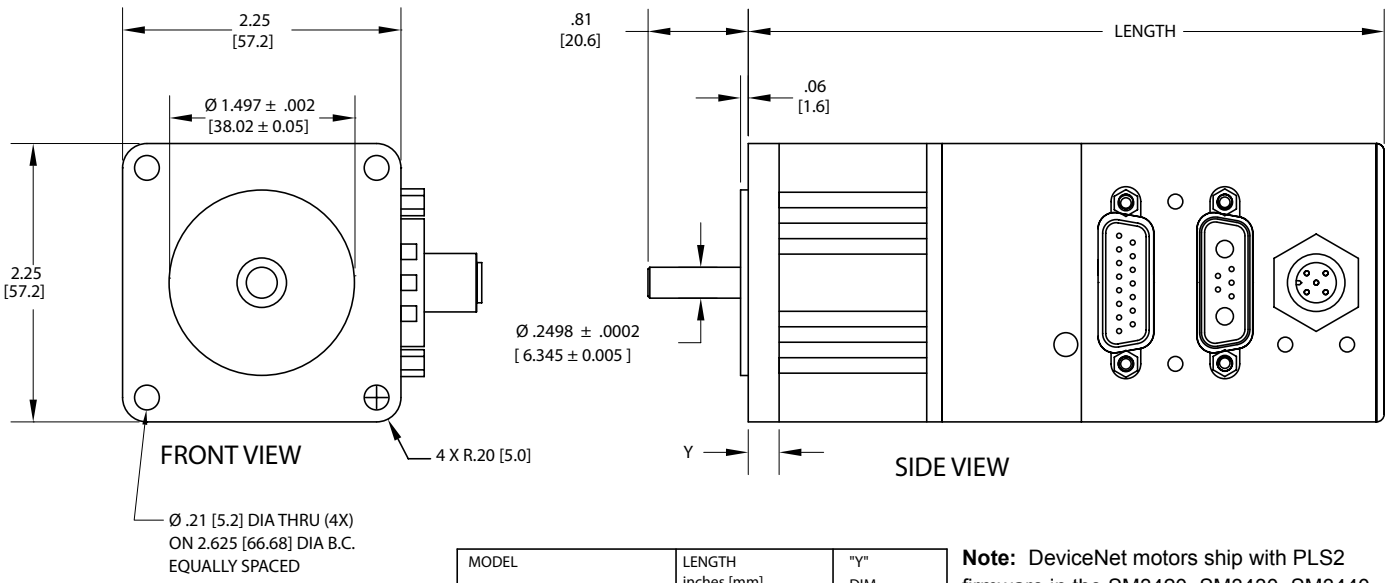

MODEL	LENGTH inches [mm]	"Y" DIM
SM2320D-DN2BRKPLS	5.86 [148.7]	.25 [6.4]
SM2330D-DN2BRKPLS	6.51 [165.2]	
SM2340D-DN2BRKPLS	7.16 [181.7]	
SM2337D-DN2BRKPLS	6.58 [167.0]	.19 [4.8]
SM2337DT-DN2BRKPLS	6.58 [167.0]	

Note: DeviceNet motors ship with PLS2 firmware in the SM3420, SM3430, SM3440, and SM3450 sizes only. Any others ship with PLS firmware. Please consult with the factory for full availability.

Animatics SmartMotor SM23XXD-PLS with Brake & ProfiBus™

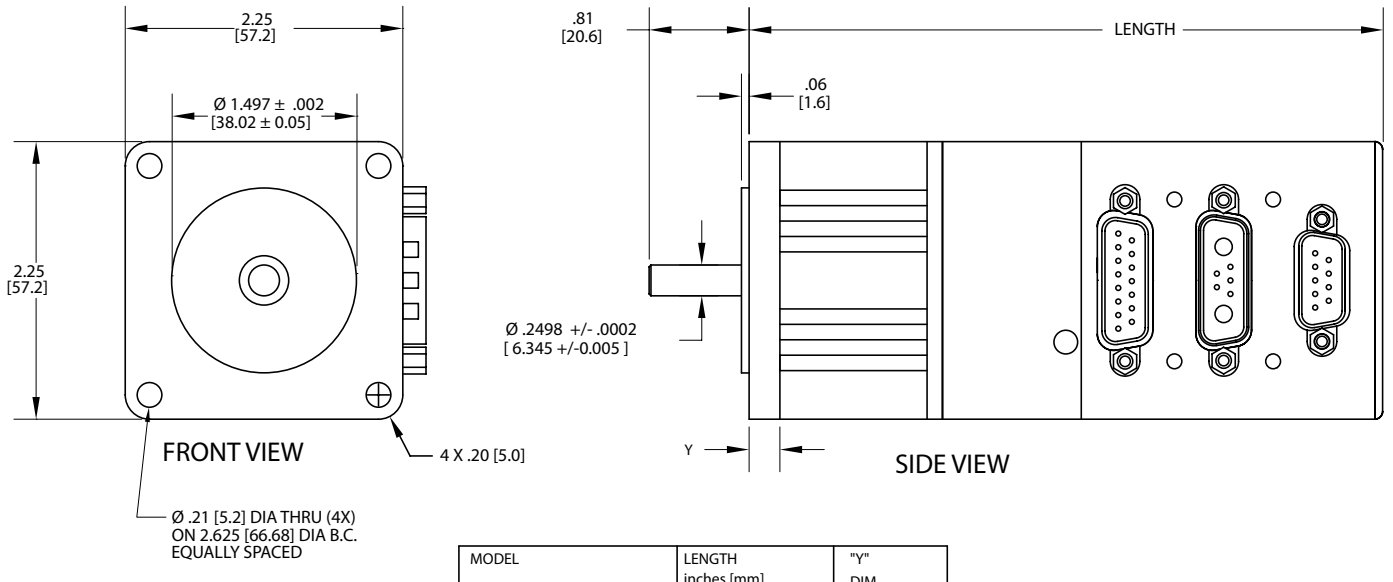

MODEL	LENGTH inches [mm]	"Y" DIM
SM2320D-PBBRKPLS2	5.86 [148.7]	.25 [6.4]
SM2330D-PBBRKPLS2	6.51 [165.2]	
SM2340D-PBBRKPLS2	7.16 [181.7]	
SM2337D-PBBRKPLS2	6.58 [167.0]	.19 [4.8]
SM2337DT-PBBRKPLS2	6.58 [167.0]	

Animatics Corporation • All integrated motor products made by Animatics are covered by patent number 5,912,541

Animatics SmartMotor SM3416D-PLS2 with Brake

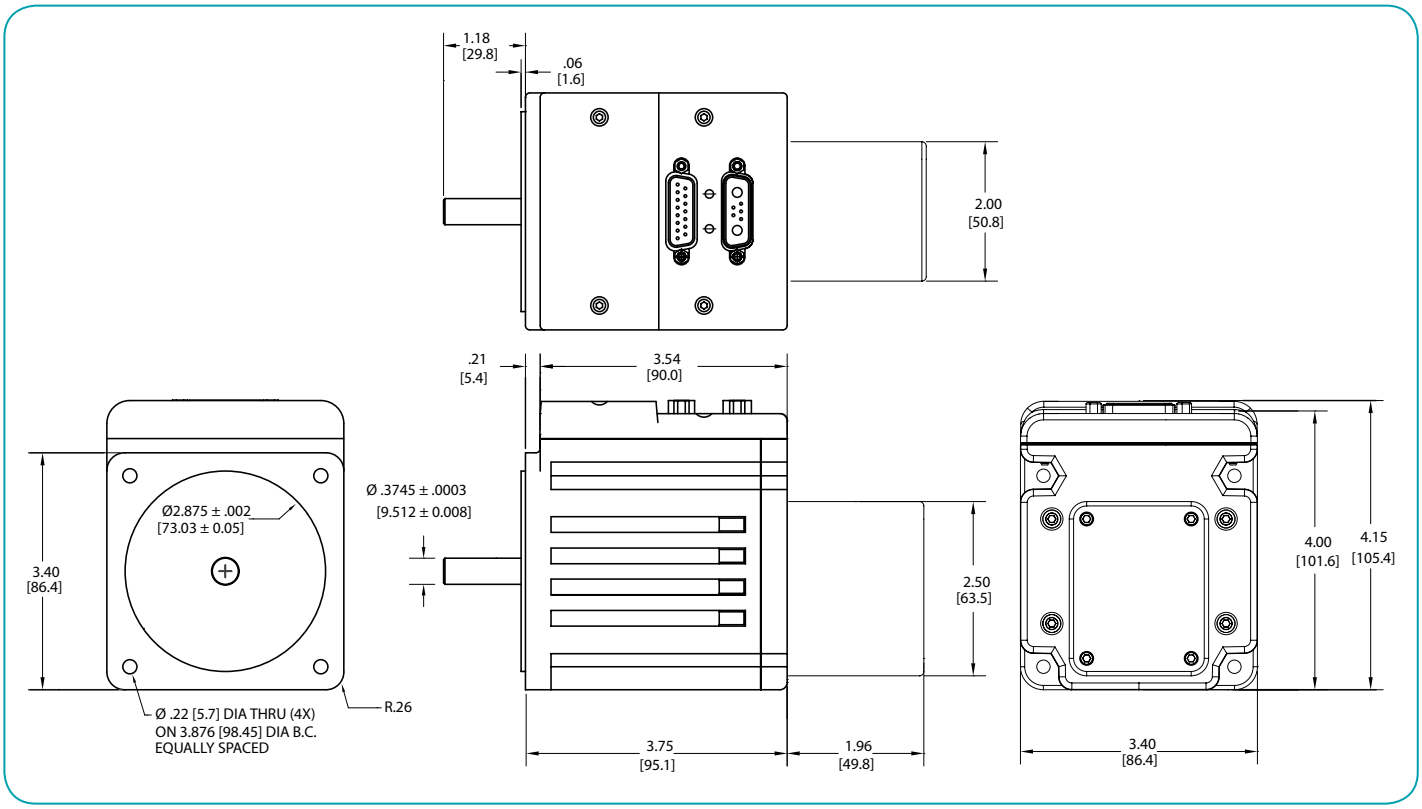

Animatics SmartMotor SM3416D-PLS2 with Brake & Ethernet

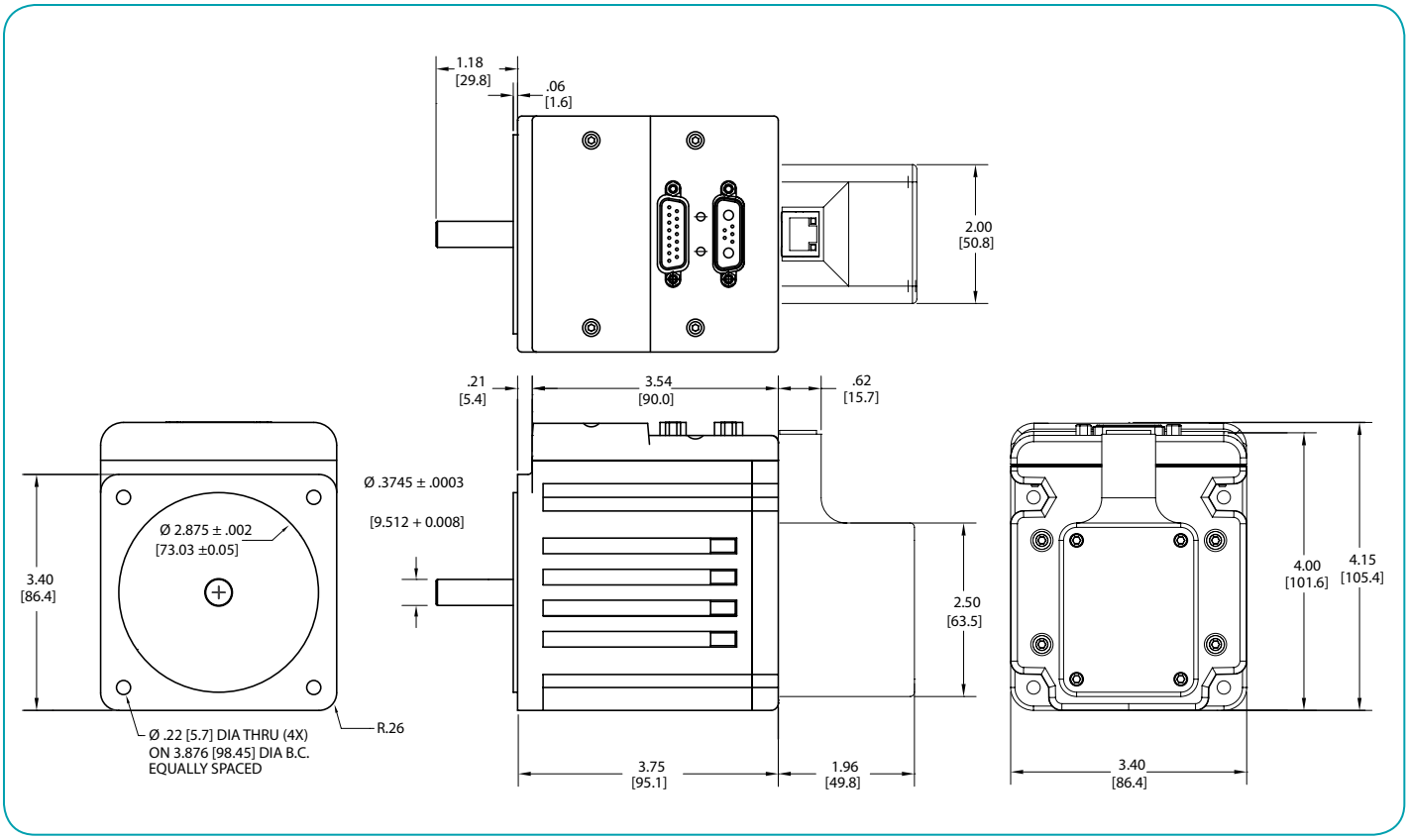

Animatics SmartMotor SM3416DT-PLS2 with Brake

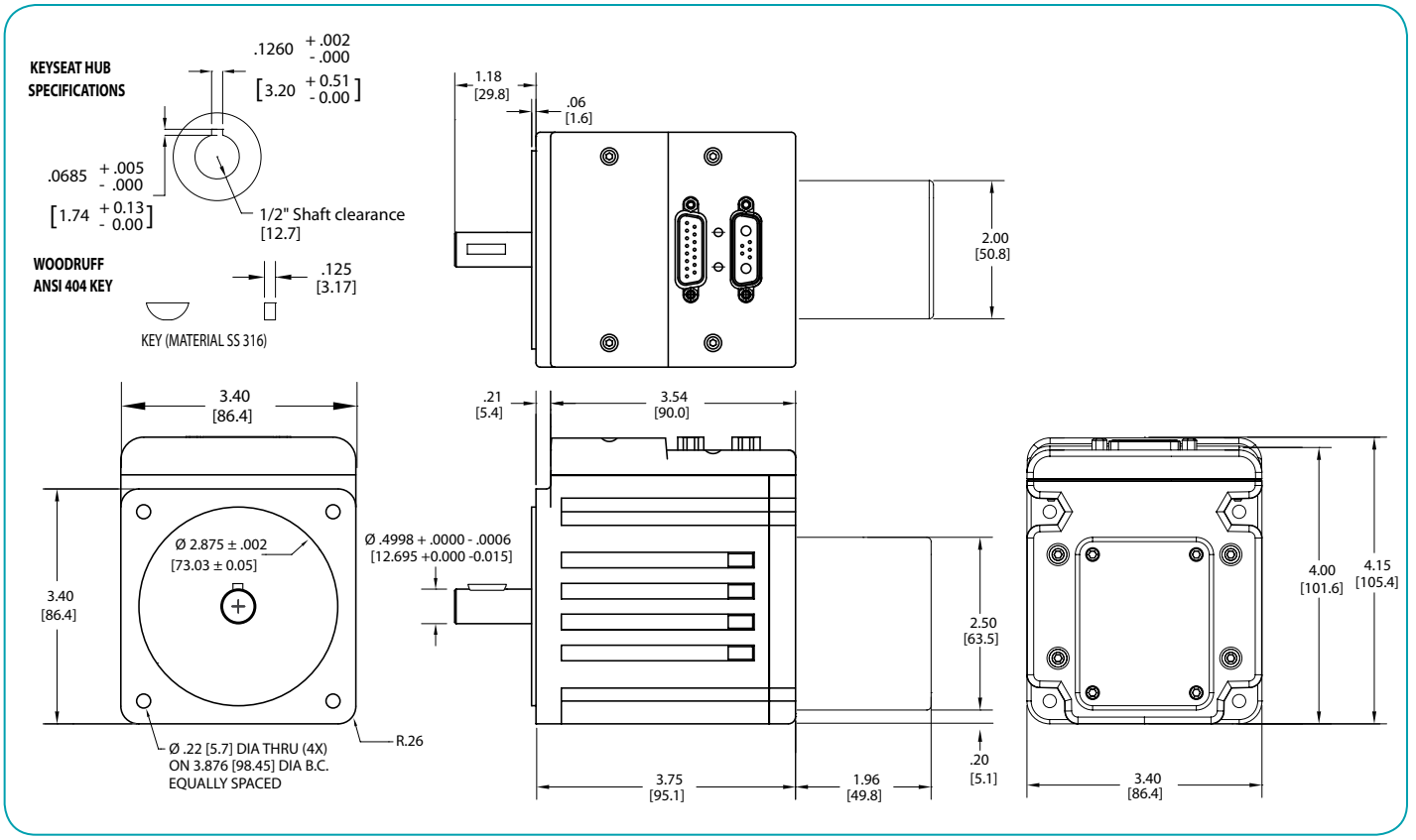

Animatics SmartMotor SM3416DT-PLS2 with Brake & Ethernet

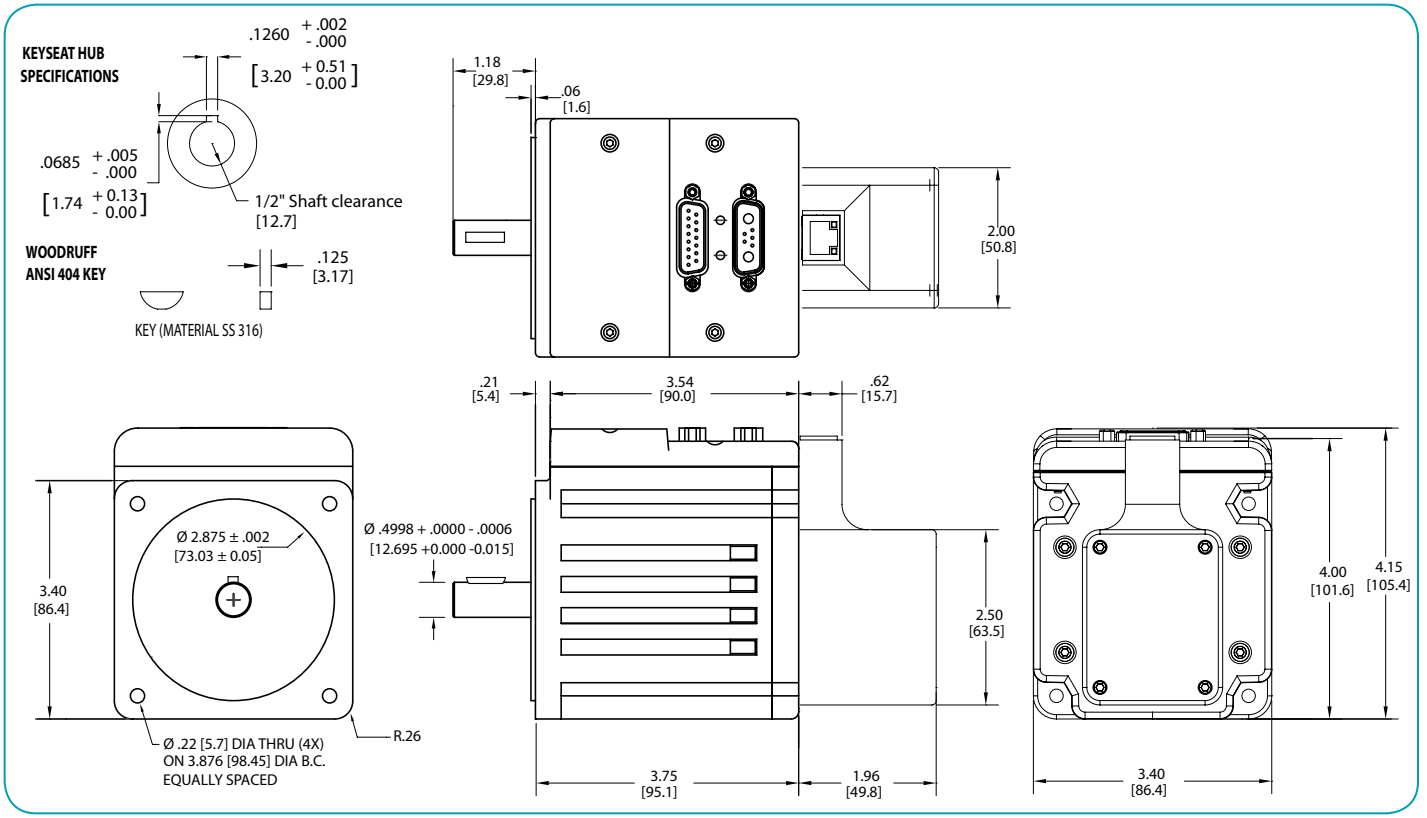

Animatics Corporation • All integrated motor products made by Animatics are covered by patent number 5,912,541

Animatics SmartMotor SM34XXD-PLS2 with Brake

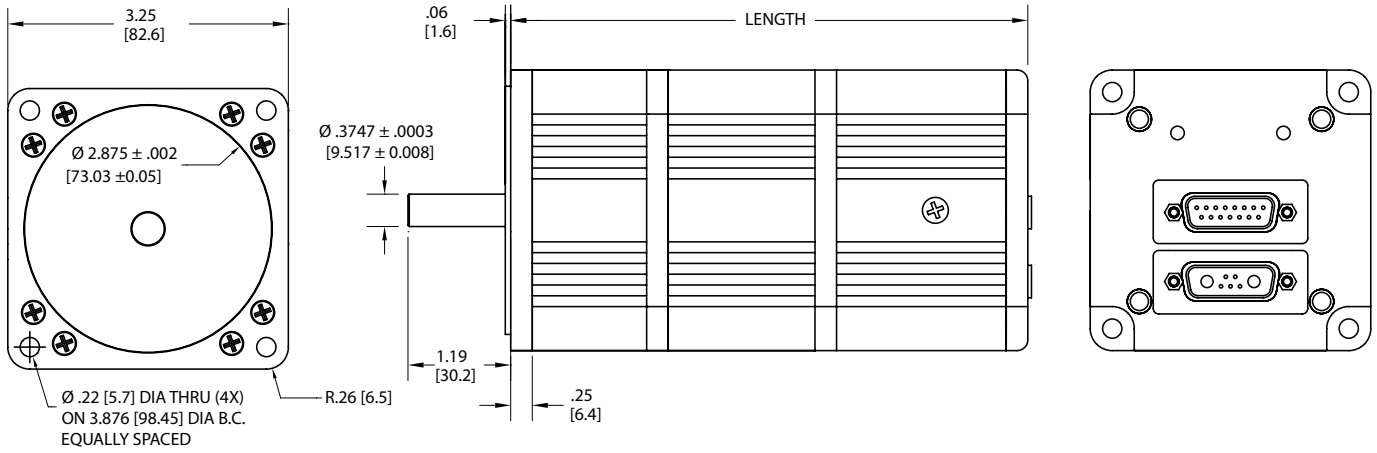

FRONT VIEW SIDE VIEW REAR VIEW

MODEL	LENGTH
SM3420D-BRK	6.276 [159.4]
SM3430D-BRK	6.926 [175.9]
SM3440D-BRK	7.576 [192.4]
SM3450D-BRK	8.226 [208.9]

Animatics SmartMotor SM34XXD-PLS2 with Brake & Devicenet™

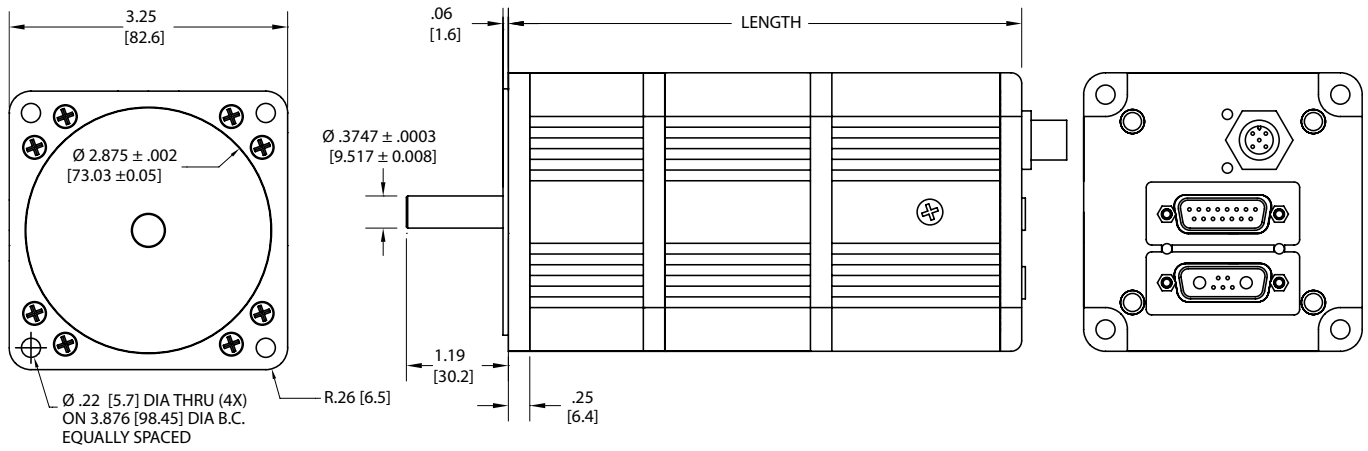

FRONT VIEW SIDE VIEW REAR VIEW

MODEL	LENGTH
SM3420D-DN2BRKPLS2	6.65 [168.9]
SM3430D-DN2BRKPLS2	7.30 [185.4]
SM3440D-DN2BRKPLS2	7.95 [201.9]
SM3450D-DN2BRKPLS2	8.60 [281.4]

Animatics SmartMotor SM34XXD-PLS2 with Brake & ProfiBus™

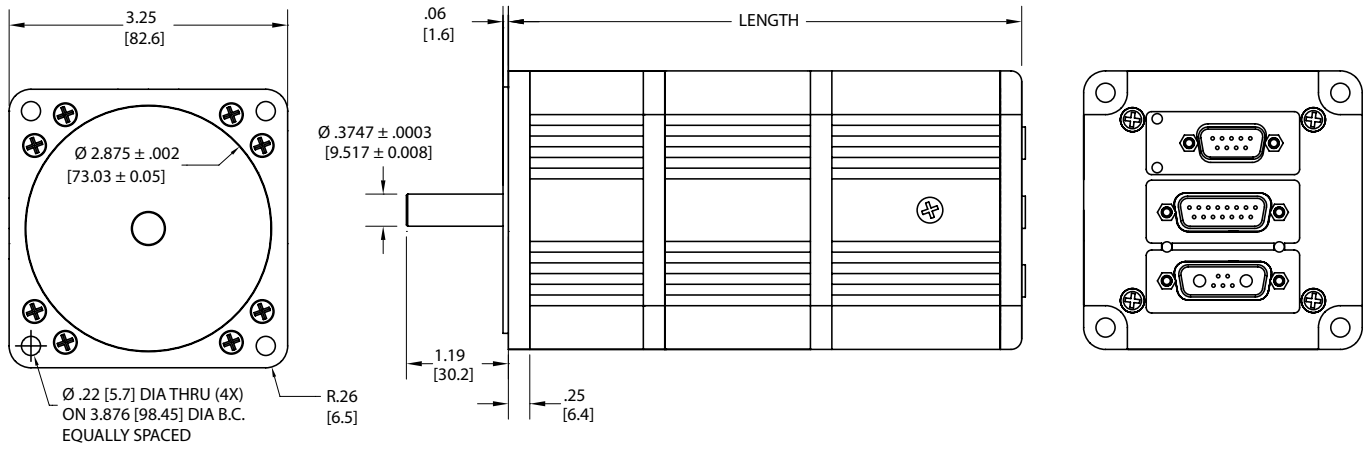

FRONT VIEW SIDE VIEW REAR VIEW

MODEL	LENGTH
SM3420D-BRKPB	6.65 [168.9]
SM3430D-BRKPB	7.30 [185.4]
SM3440D-BRKPB	7.95 [201.9]
SM3450D-BRKPB	8.60 [281.4]

Animatics SmartMotor SM34XXD-PLS2 with Brake & Ethernet

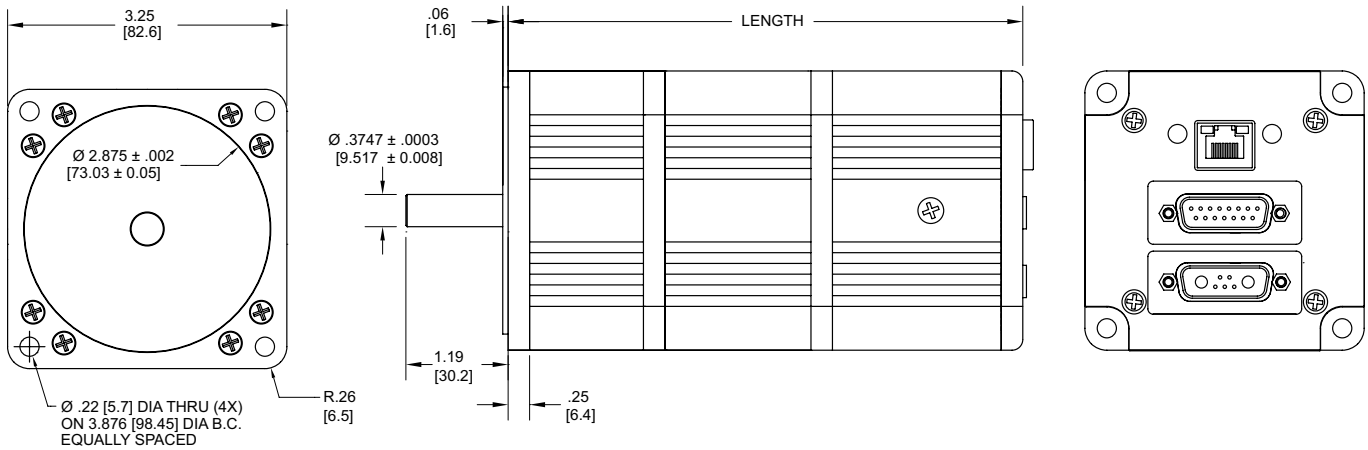

FRONT VIEW SIDE VIEW REAR VIEW

MODEL	LENGTH
SM3420D-BRKETH	6.276 [159.4]
SM3430D-BRKETH	6.926 [175.9]
SM3440D-BRKETH	7.576 [192.4]
SM3450D-BRKETH	8.226 [208.9]

Power:

Each SmartMotor™ is operated from 24 to 48VDC. Some of the larger SmartMotors can draw high current.

It is highly recommended to use heavy gage wire to connect the larger motors. As a result, the “Add-A-Motor” is recommended for the 17 and 23 frame series only.

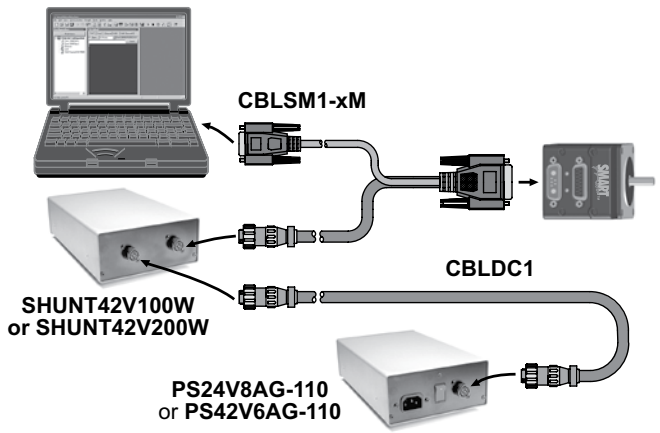

Communications:

Each SmartMotor has a primary RS-232 serial port and a secondary RS-485 port by re-assignment of ports E and F of the 7 I/O points. Up to 100 SmartMotors may be separately addressed and are identifiable on either RS-232 or RS-485.

The most common and cost effective solution is typically RS-232 serial communications. Under this structure, each motor is placed in an electrical serial connection such that the transmit line of one motor is connected to the receive line of the next. Each motor will be set to “echo” the incoming data to the next motor down with approximately 1 millisecond propagation delay. There is no signal integrity loss from one motor to the next, which results in highly reliable communications.

The following cables/devices are used for RS-232 and Power connectivity:

CBLPWRCOM2-xM	Power and communications cable with flying leads or in conjunction with DIN-RS232 8 channel isolated communications board
CBLSM1-xM	Power and Communications cable with DB-9 serial connector and power supply connector that fits our enclosed power supplies
CBLSM1-DEMO	Testing cable used with our PWR116 “laptop” type power supply
CBLSM1-x-y-z	Custom length multi-drop RS-232 daisy chain cable

The following cables are used for RS-485 and Power connectivity:

RS485-ISO	Converts primary RS-232 to isolated RS-485 (Note: uses Port G I/O pin)
CBLSM2-x-y-z	Custom multi drop isolated RS-485 (multiple RS485-ISO adapters)

Interfacing with I/O devices:

Each SmartMotor has 7 TTL level user-configurable I/O. Each can be used as either inputs or outputs. The following is a quick review of I/O interfacing connectivity options:

CBLIO5V-xM	Direct connection to 5VTTL I/O
CBLIO5V-xM via OPTO2	24VDC DC isolation and conversion of 5V signals
CBLIO5V-xM via DINIO7	Motor Breakout board to industry standard OPTO relays
CBLIO-ISO1-xM	Isolated 24VDC logic conversion cable

The following pages are a roadmap to motor connectivity. These pages show the physical layout of how cables are used including power, communications and I/O interconnection.

RS-232 Communications Using USB Adapter

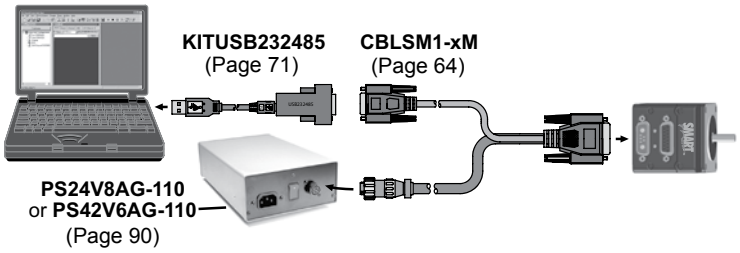

RS-232 Communications with Power Supply & Protective Shunt

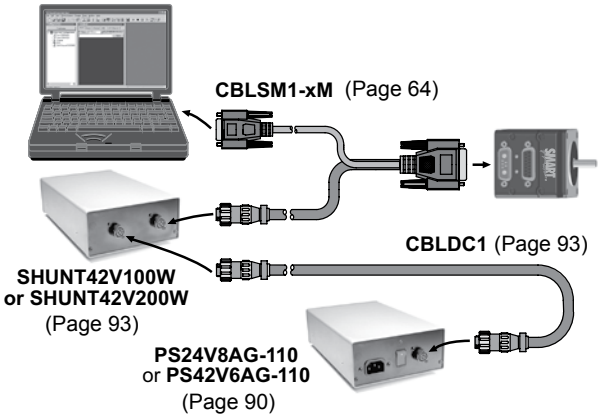

RS-232 Multidrop using Add-A-Motor Cables

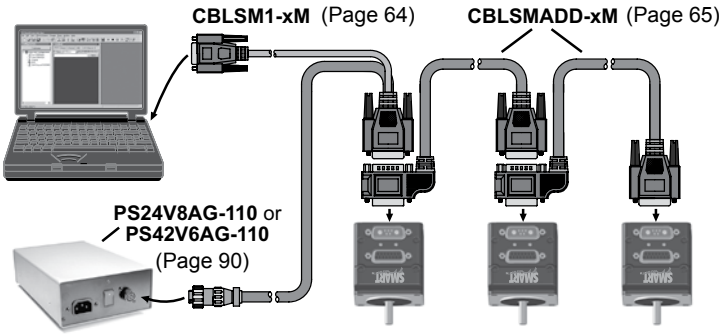

RS-232 Multidrop using Custom Order Cable

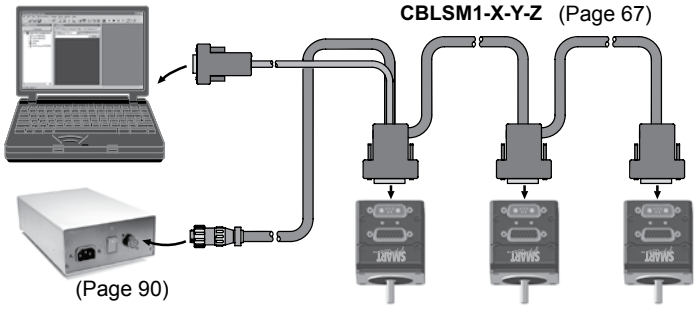

RS-485 Isolated Communications Using Custom Order Cable

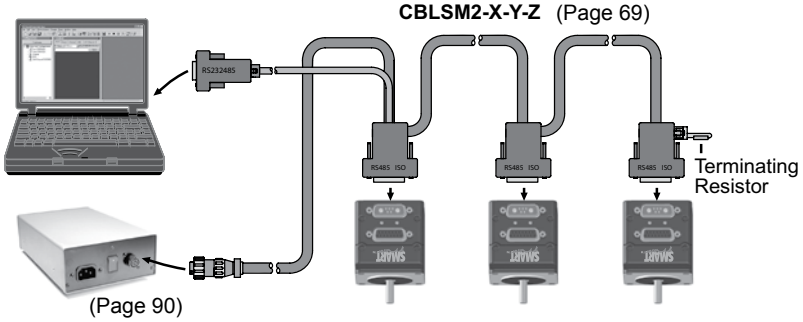

Animatics Corporation • All integrated motor products made by Animatics are covered by patent number 5,912,541

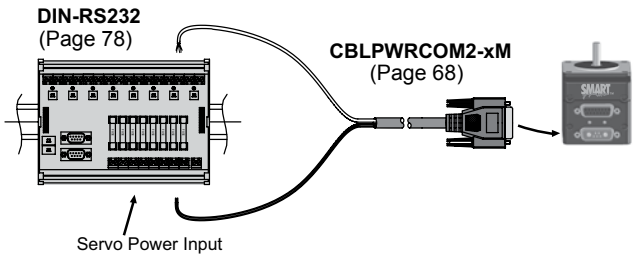

Isolated RS-232 Communications for up to 8 SmartMotors

Demonstration & Development Configurations

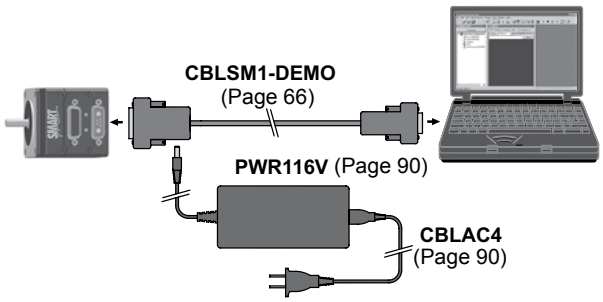

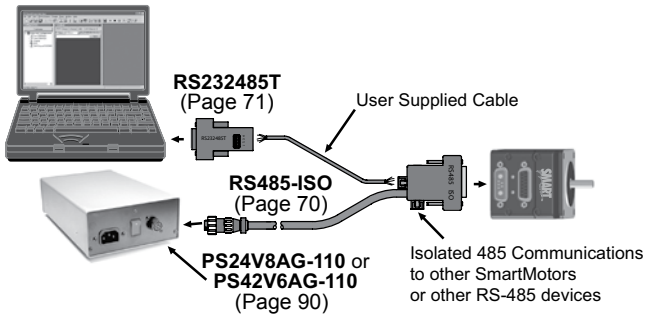

Isolated RS-485 Communications

Interfacing with 24V I/O Devices

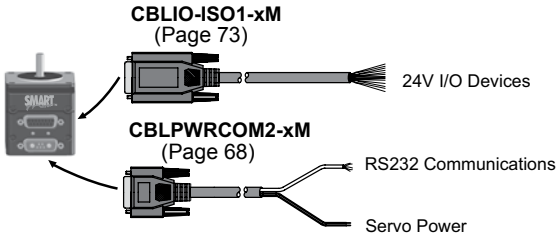

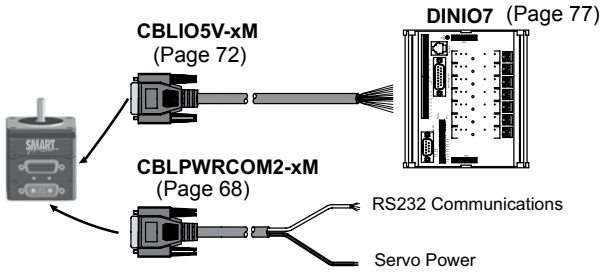

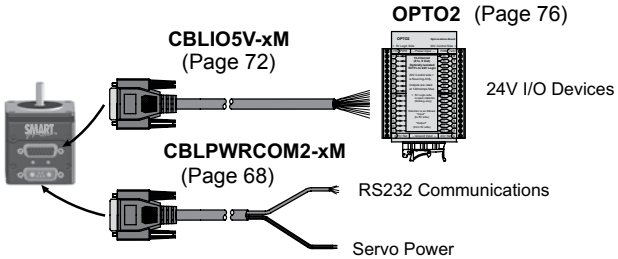

Recommended Power Supply

PS42V20AF series
(Page 85)

Recommended Shunts

SHUNT42V100W-OF
(Page 92)

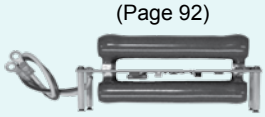

SHUNT42V200W-OF
(Page 92)

CBLSM1-3M

Power and Communications Cable for Main 7W2 Connector on Animatics SmartMotor™

CBLSM1 series is the main power and communications cable consisting of a 7W2 main motor connector split out to a pre-wired RS-232 DB-9 connector to plug directly into any standard PC serial port.

The power is split off and has a connector that plugs into our enclosed frame power supplies on page 90.

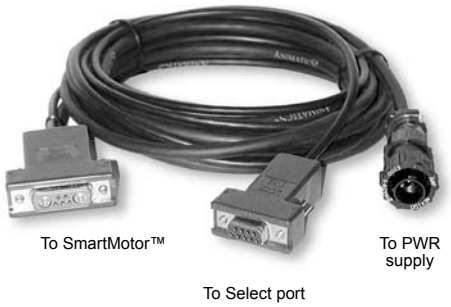

Standard Length

Part Number	Length
CBLSM1-3M	3 meters
CBLSM1-10M	10 meters

Custom Length

Part Number	Length
CBLSM1-x	x (in feet)

Note: Communications Shield is connected at the DB-9 end, but NOT the Motor end. The power cable is connected at the motor connector shell but electrically isolated from the any internal electronic components.

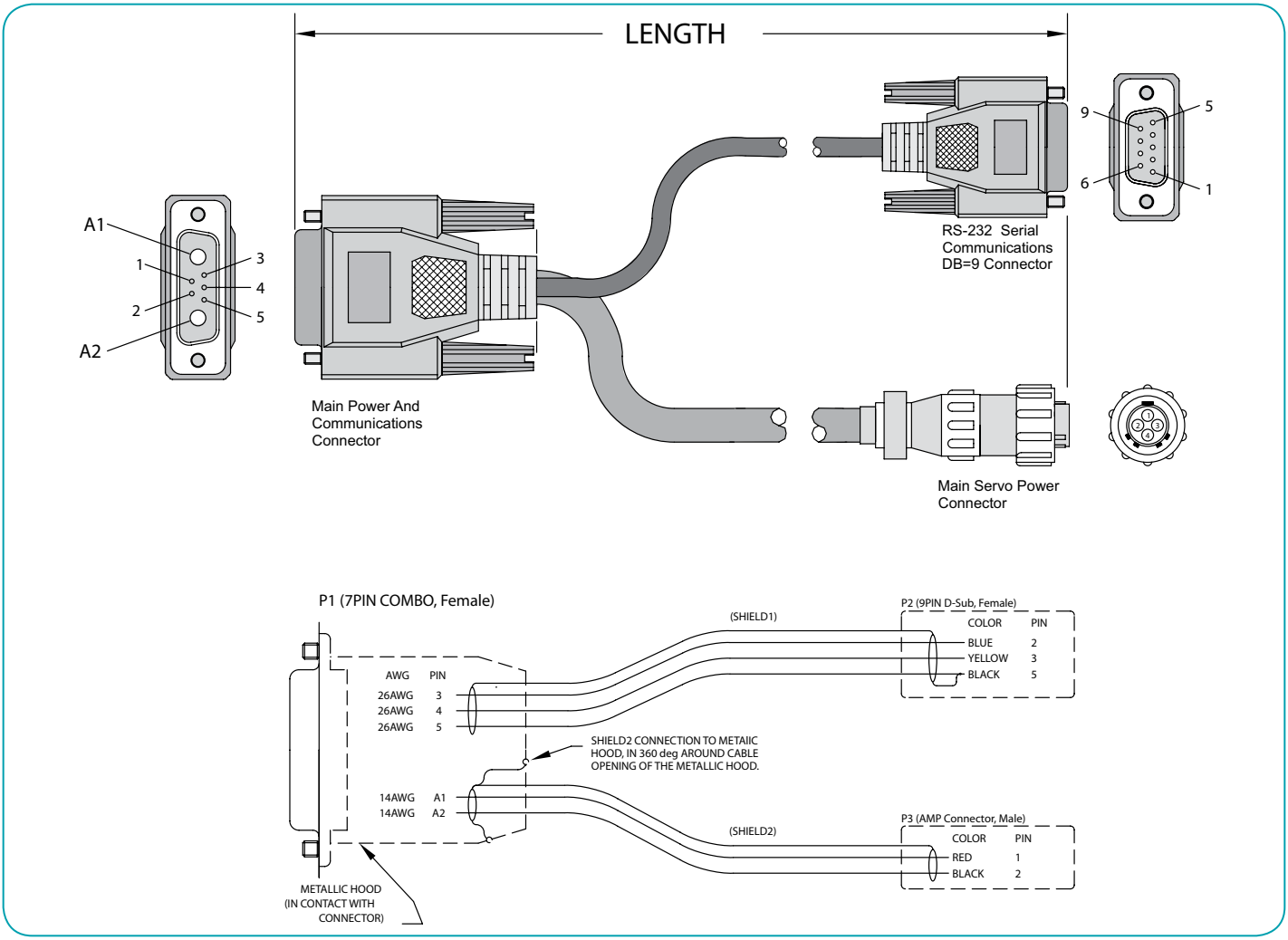

CBLSMADD-xM (Animatics "Add-A-Motor" Cable)

Power and Communications Daisy Chain Cable for networking Power and Communications to multiple Animatics SmartMotors.

CBLSMADD series is the main power and communications cable consisting of a feed-thru 7W2 main motor connector split out to a single second motor 7W2 connector.

The cable is designed to allow ease of connection to multiple motors in a single RS-232 serial daisy chain network. The Main Power Ground wire is of a larger gauge to decrease noise emissions at the ground-plane level. The RS-232 Communications lines are internally shielded from the power lines.

Part Number	Length
CBLSMADD-0.3	0.3 meters
CBLSMADD-1.0	1 meters
CBLSMADD-3.0	3 meters
CBLSMADD-7.5	7.5 meters

Note: Due to gauge of the main power lines, it is not recommended to use the "Add-A-Motor" cables with the larger 34 frame SmartMotors. If there is just one 34 frame SmartMotor in a system design, then it should be the first motor in the chain so as to minimize voltage drop effects over the entire network.

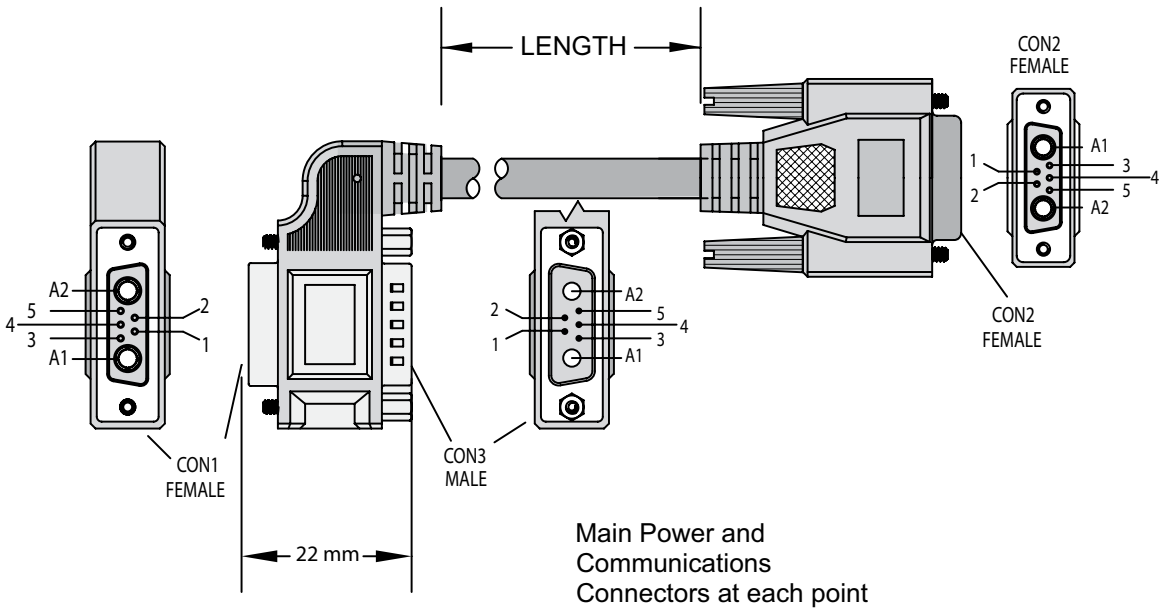

Main Power and Communications Connectors at each point

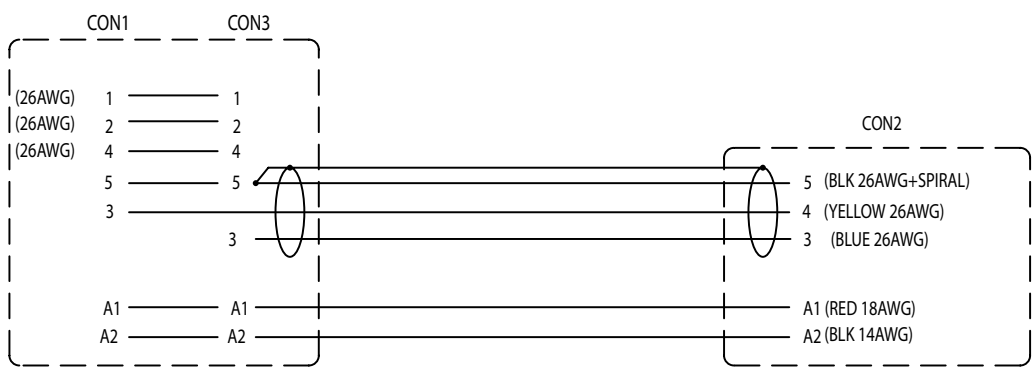

CBLSM1-DEMO

Training/Testing Power and Communications Cable for Main 7W2 Connector on Animatics SmartMotor™.

CBLSM1-Demo cable is only available in a fixed length of ~1 Meter. Similar to the CBLSM1-xM series, it consists of a 7W2 main motor connector split out to a pre-wired RS-232 DB-9 connector to plug directly into any standard PC serial port. The power to the motor is provided via a single 5mm diameter 2.1 mm center pin DC connector.

This connector accepts our PWR116V 24VDC power supply on page 90.

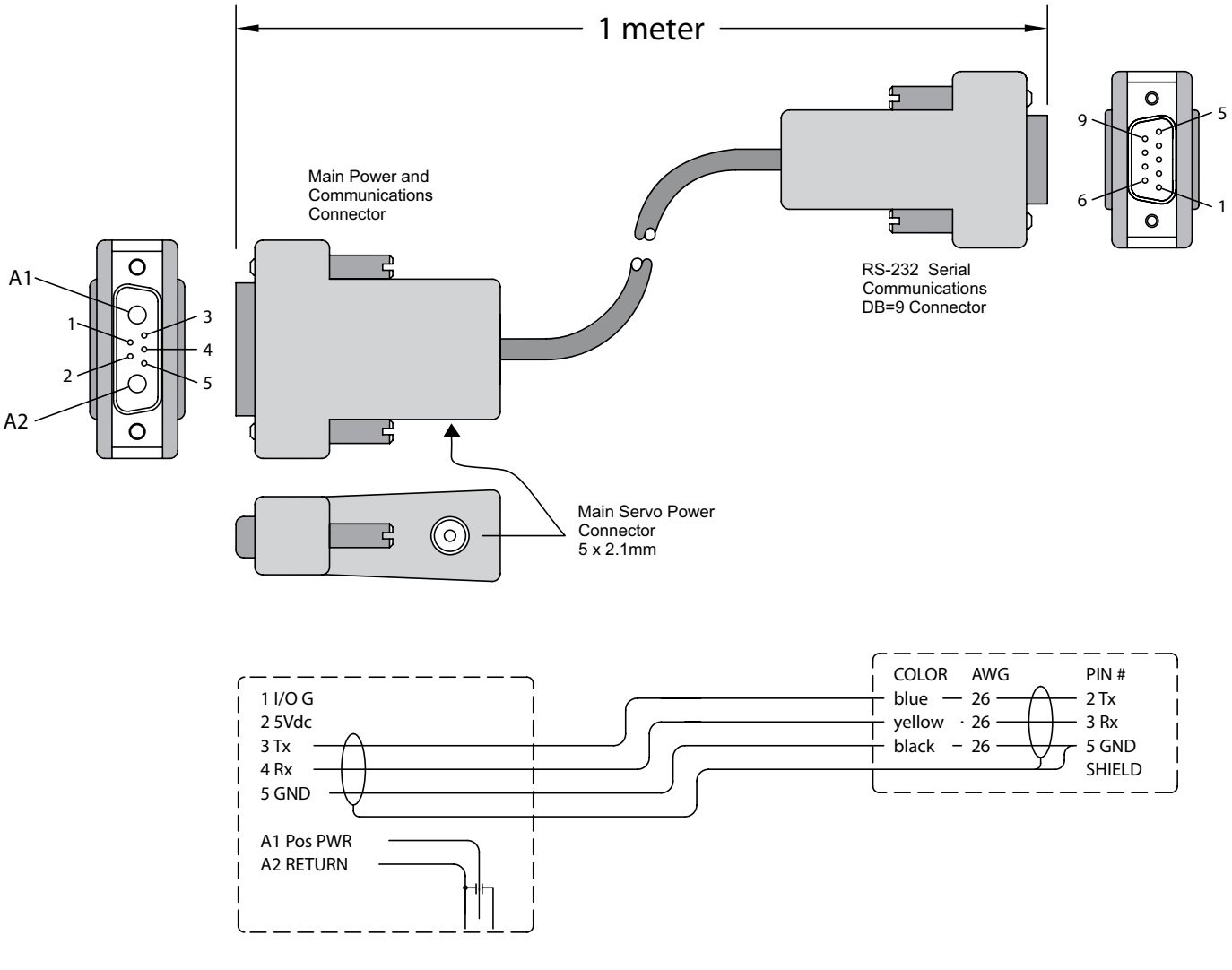

CBLSM1-X-Y-Z (Animatics Custom Build-to-Order)

Custom Multi-Motor Power and Communications Daisy Chain Cable for networking Power and Communications to Multiple Animatics SmartMotors.

These cables are made to order where:

X = cable length in Feet from the first motor to the Power and Serial connectors
Y = Number of Motors
Z = distance in feet from one motor to the next

Note: This part numbering system does not allow for different length between each motor daisy chain network. The RS-232 Communications lines are in a separate shielded cable from the main power cable for optimum noise immunity.

Example:

CBLSM1- 10- 3- 5 would give you a 3-motor cable with 10 feet to the first motor and 5 feet between each motor.

Example of 3-Motor CBLSM1-X-Y-Z shown

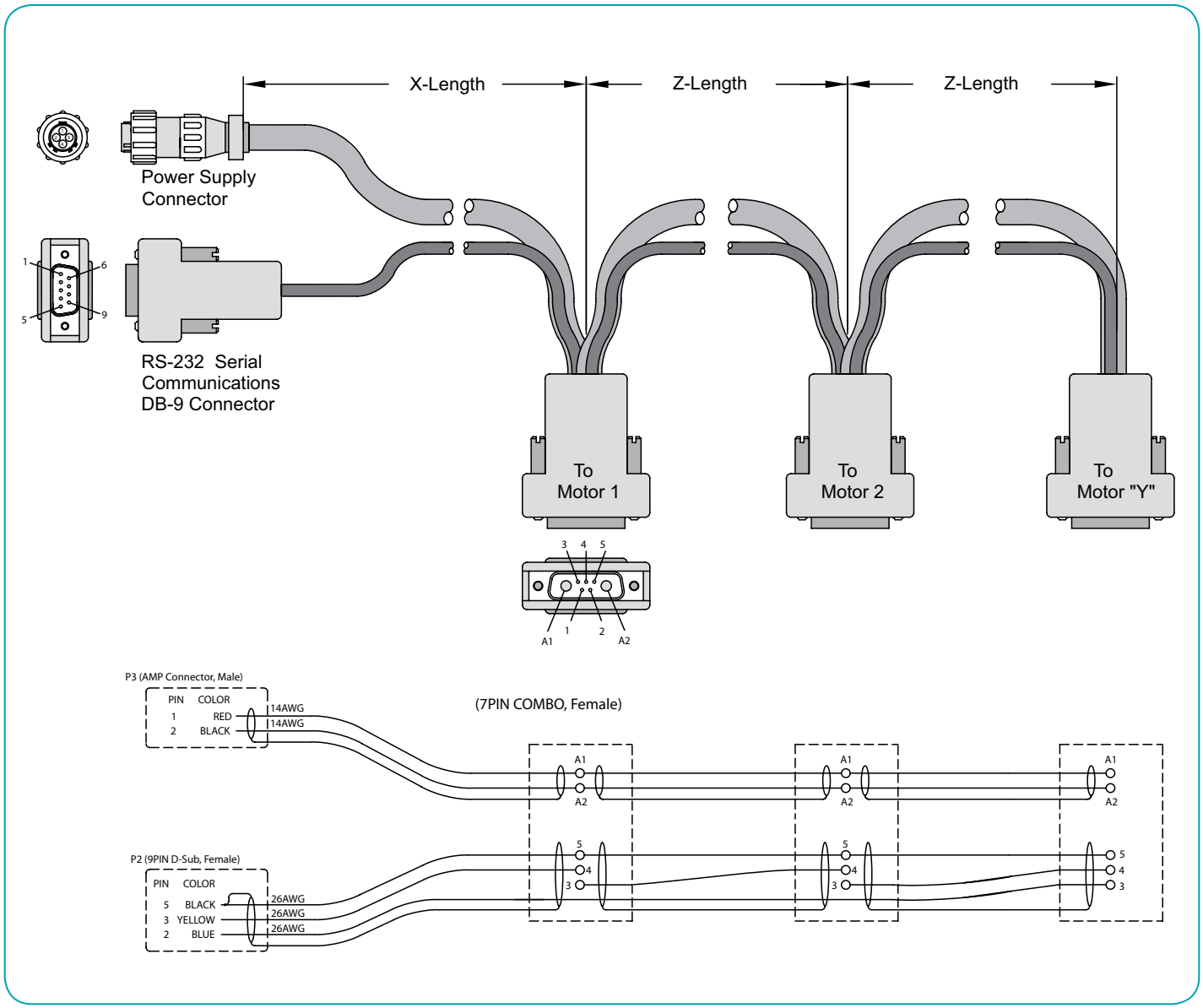

CBLPWRCOM2-xM

Power and Communications Cable (Flying Leads) for Main 7W2 Connector on Animatics SmartMotor™.

CBLPWRCOM2 series a Power and communications cable consisting of a 7W2 main motor connector with communications internally shielded from power and a full shield over entire length terminating at a metal jacket inside the over-molded connector.

Part Number	Length
CBLPWRCOM2-3M	3 meters
CBLPWRCOM2-5M	5 meters
CBLPWRCOM2-10M	10 meters

Note: Communications Shield is connected at the DB-9 end, but NOT the Motor end. The power cable is connected at the motor connector shell but electrically isolated from the any internal electronic components.

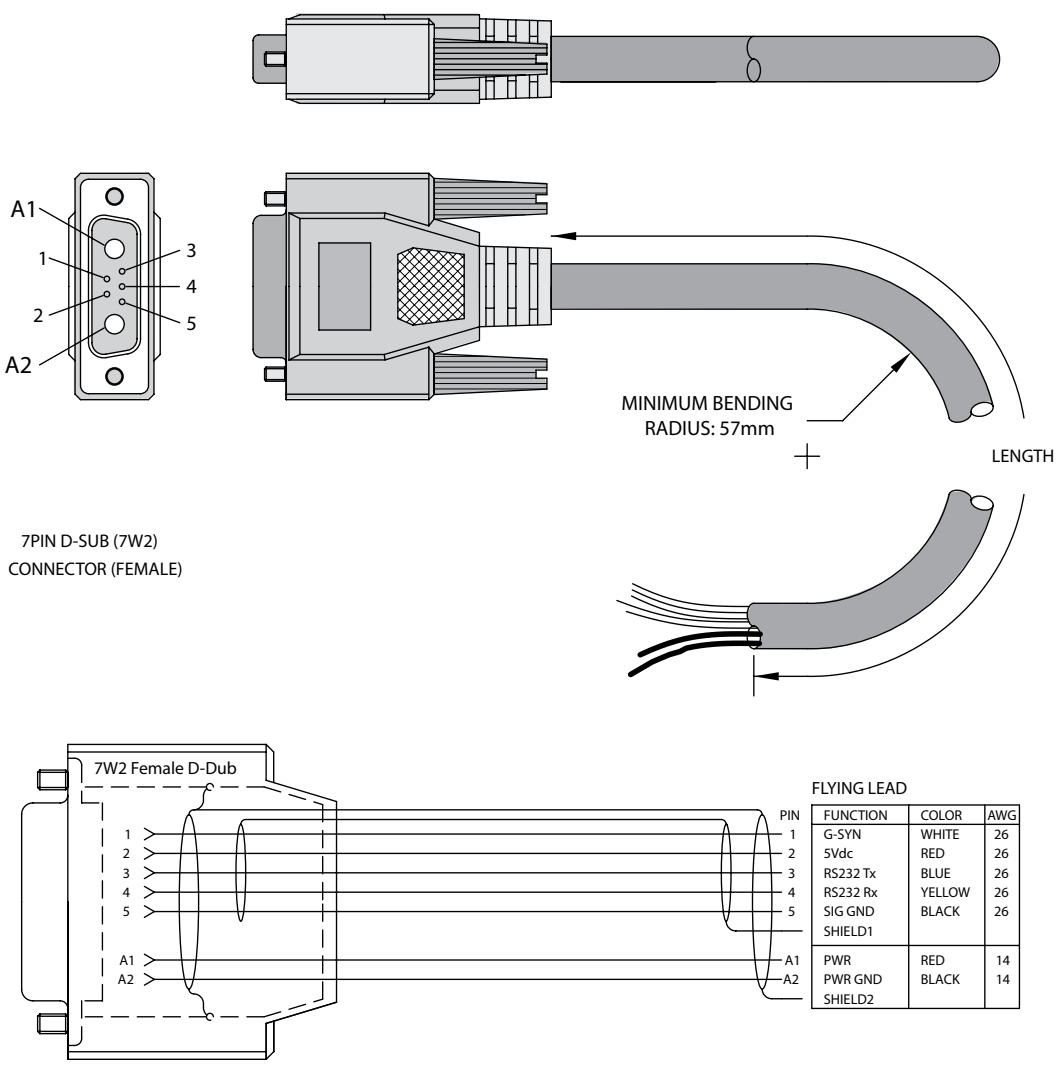

FLYING LEAD

FUNCTION	COLOR	AWG
G-SYN	WHITE	26
5Vdc	RED	26
RS232 Tx	BLUE	26
RS232 Rx	YELLOW	26
SIG GND	BLACK	26
SHIELD1		
PWR	RED	14
PWR GND	BLACK	14
SHIELD2		

CBLSM2-X-Y-Z (Custom Build-to-Order)

Isolated RS-485 Multi-Drop Custom Cable

This cable makes use of the RS232485 converter at the host and a single RS485-ISO adapter at each motor.

The adapters have power hard wired and RS-485 wired together via jumper cables with a 4 pin G-grid Molex connect at each end.

As a result, it is easy to add or remove a given motor on the bus for setup and troubleshooting.

Since the RS485-ISO adapters are used, the entire Bus is isolated and shielded for maximum noise immunity in electrically harsh environments.

These cables are made to order where:

X = cable length in Feet from the first motor to the Power and Serial connectors
Y = Number of Motors
Z = distance in feet fro one motor to the next

Note: This part numbering system does not allow for different length between each motor daisy chain network.

Example:
CBLSM2- 10- 3- 5 would give you a 3-motor cable with 10 feet to the first motor and 5 feet between each motor

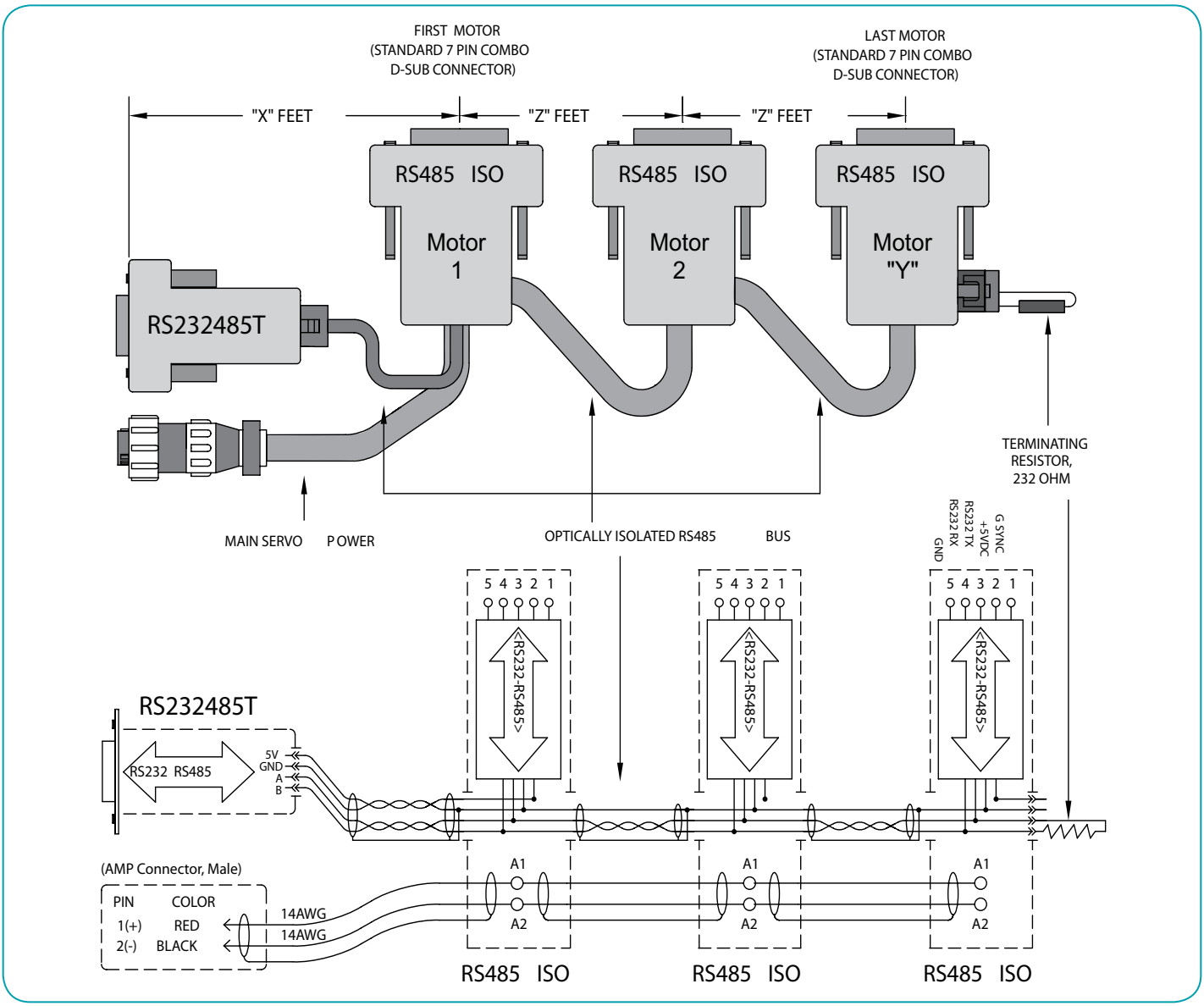

RS485-ISO

The RS485-ISO adapter provides electrically isolated conversion from RS-232 on the main 7W2 connector to RS-485. The adapter comes standard with a 10 Foot power cable and two parallel 4 pin Molex RS-485 connectors.

RS485 provides improved noise immunity over cable lengths of up to 1,000 ft (305m). It also allows you to operate a network of up to 100 SmartMotors in parallel, rather than daisy-chaining the communications from one motor to the next.

The adapter draws power and ground from the SmartMotor main connector (pins 2 and 5). It does require the use of the main connector G-Synch line (pin 1) for Read-Write control of the 485 transceiver.

The RS485-ISO communications adapter can be ordered with or without the power cable (no cable P/N: RS485ISO-NOCBL).

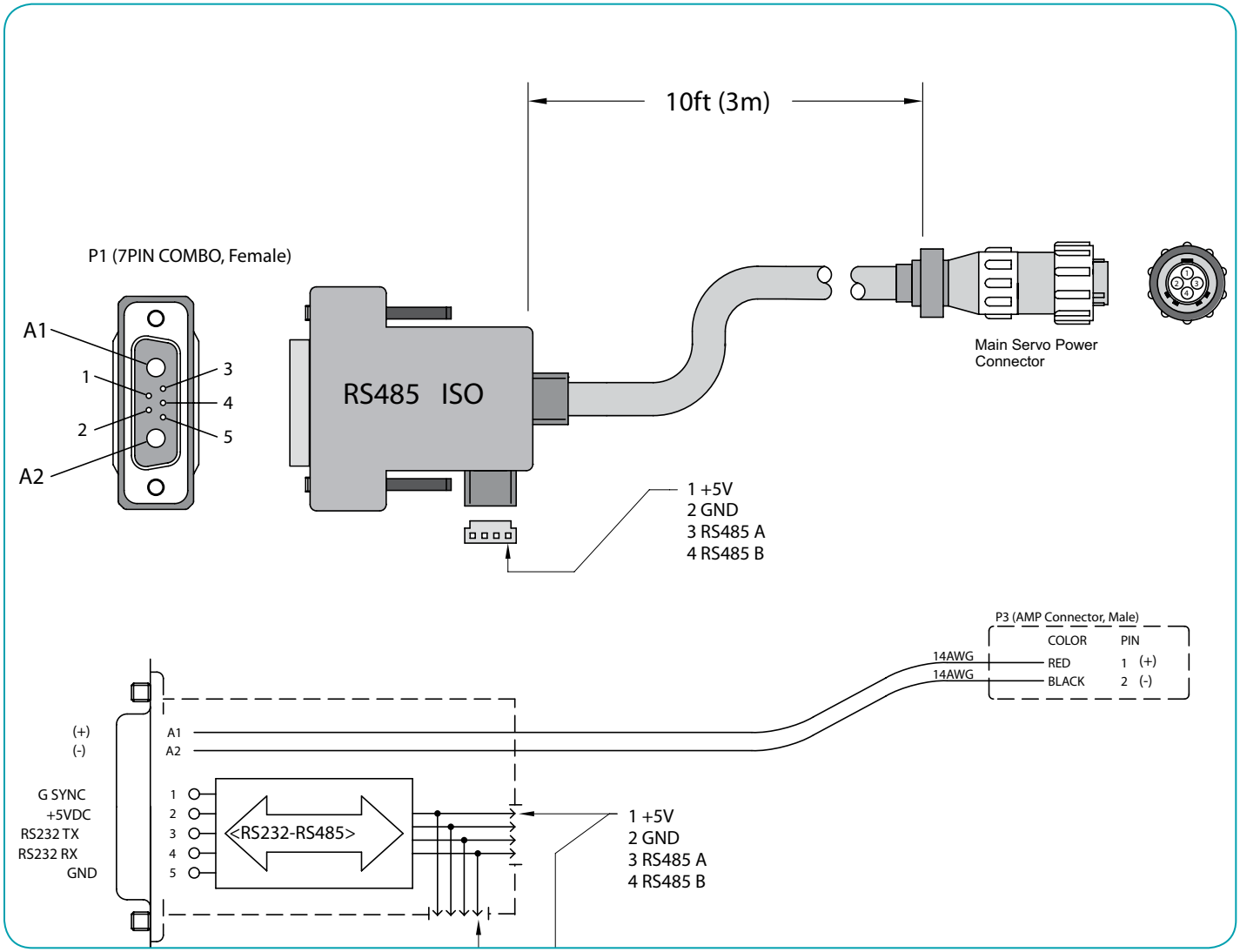

Animatics Corporation • All integrated motor products made by Animatics are covered by patent number 5,912,541

RS232485T

RS232485T is a non-isolated RS-232 to RS-485 communications adapter. It requires no drivers because it is hardware based only. The DB-9 connector can be plugged directly into a standard PC Serial port allowing the user to easily connect to and communicate with RS-485 devices.

Note: The 4-pin molex connector is designed to match the RS485ISO adapters below.

The connector can be removed to allow direct screw terminal connection as well.

Includes two KITDC3

(Proper RS-485 biasing must be used)

PIN#	FUNCTION:
1	5VDC
2	GND
3	RS485 A
4	RS485 B

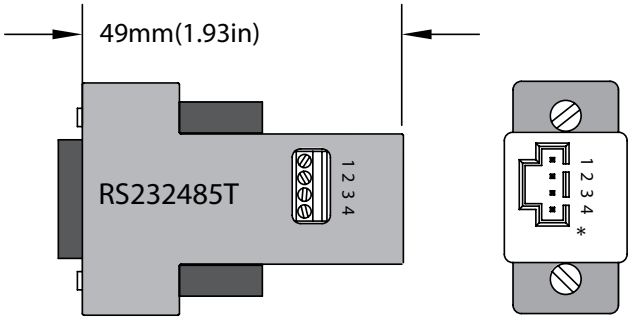

KITUSB232485

USB232485 is a non-isolated USB to RS-232 and RS-485 adapter. Available with Windows 98/2K/XP/Vista drivers.

This adapter plugs into standard USB port and provides either RS-232 or RS-485 communications. It is provided with ~1Meter standard USB cable.

Note: This is a single Port Device, it does not facilitate the use of both RS-232 AND RS-485 at the same time.

(Proper RS-485 biasing must be used in accordance with manual.)

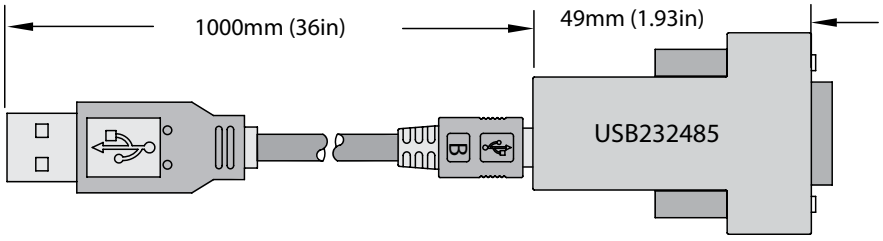

PIN#	FUNCTION:
1	RS485 A
2	RS232 Rx
3	RS232 Tx
4	+5Vdc
5	GND
9	RS485 B

Main I/O connector Cable (Flying Leads) for DB-15 Connector on Animatics SmartMotor™.

CBLIO5V series is for all 5VTTL I/O, communications, Encoder output, and Control Power input (when needed for –DE option Motors).

The cable is organized in separately shielded twisted pairs to provide better noise immunity and lower emissions.

Part Number	Length
CBLIO5V-3M	3 meters
CBLIO5V-5M	5 meters
CBLIO5V-10M	10 meters

Note: The shields DO NOT have electrical contact with each other or the connector shell. This allows for proper grounding in the control cabinet or at termination point determined by user thereby eliminating ground loops.

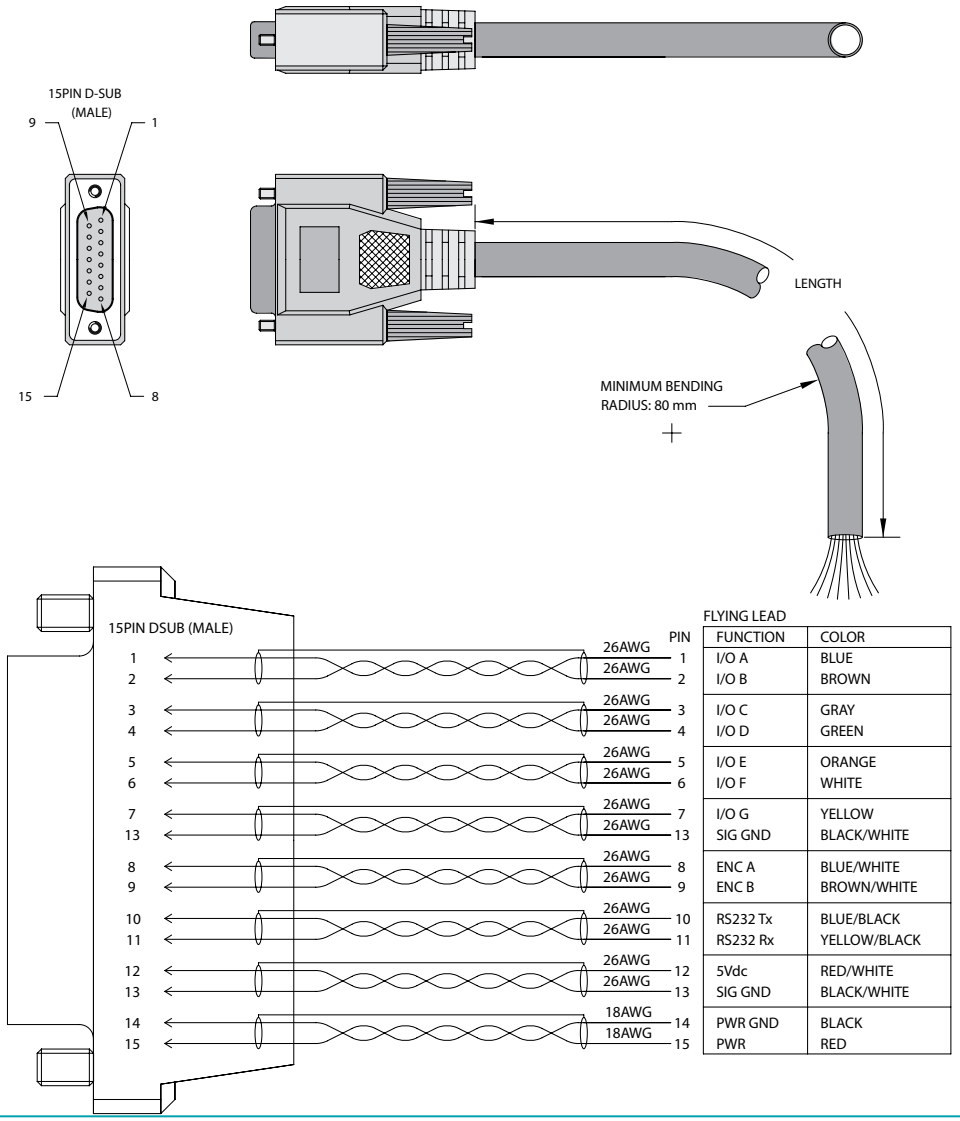

FLYING LEAD

FUNCTION	COLOR
I/O A I/O B	BLUE BROWN
I/O C I/O D	GRAY GREEN
I/O E I/O F	ORANGE WHITE
I/O G SIG GND	YELLOW BLACK/WHITE
ENC A ENC B	BLUE/WHITE BROWN/WHITE
RS232 Tx RS232 Rx	BLUE/BLACK YELLOW/BLACK
5Vdc SIG GND	RED/WHITE BLACK/WHITE
PWR GND PWR	BLACK RED

The CBLIO-ISO1 cable provide optically isolated 24VDC I/O Interface to the controller.

The cable is user configurable as 4 inputs and 3 outputs Or 5 inputs and 2 outputs.

Additionally, this cable provides direct connection to:

- RS-232 Primary Communications Port (Ch. 0)
- Encoder Output
- Control Power Input

Part Number	Length
CBLIO-ISO1-3M	3 meter
CBLIO-ISO1-5M	5 meter
CBLIO-ISO1-10M	10 meter

It can be used with standard or –DE option Animatics SmartMotors

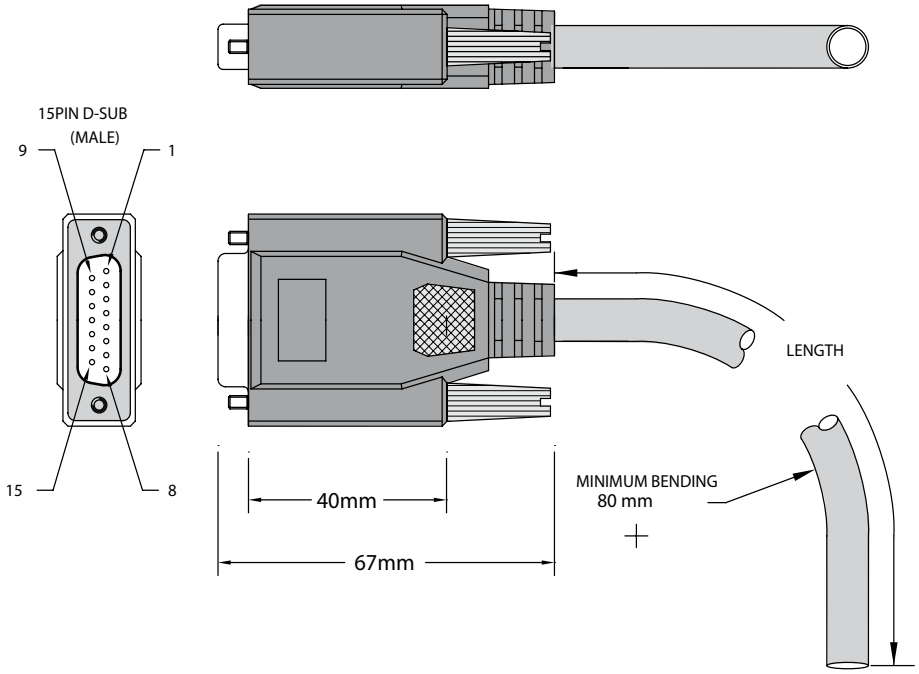

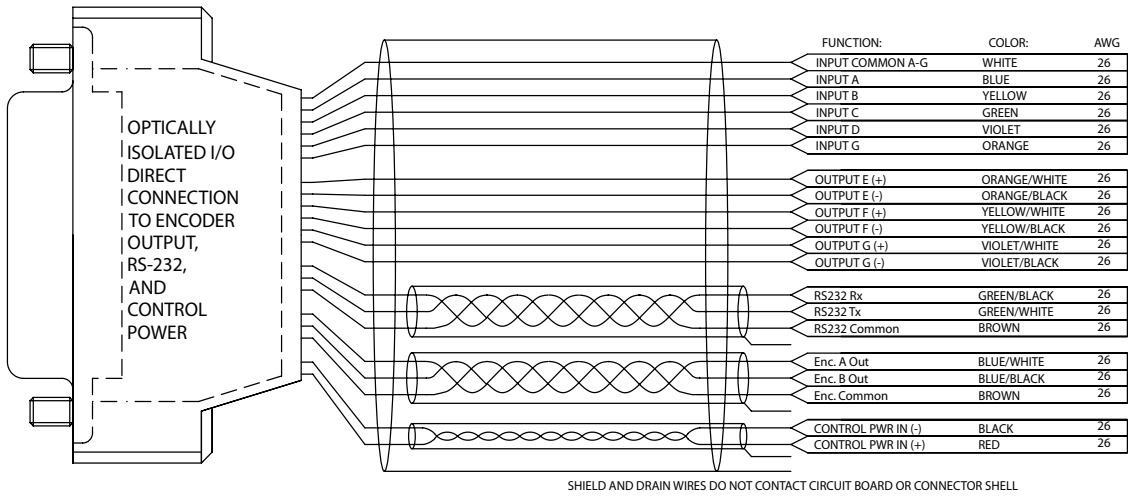

FUNCTION:	COLOR:	AWG
INPUT COMMON A-G	WHITE	26
INPUT A	BLUE	26
INPUT B	YELLOW	26
INPUT C	GREEN	26
INPUT D	VIOLET	26
INPUT G	ORANGE	26
OUTPUT E (+)	ORANGE/WHITE	26
OUTPUT E (-)	ORANGE/BLACK	26
OUTPUT F (+)	YELLOW/WHITE	26
OUTPUT F (-)	YELLOW/BLACK	26
OUTPUT G (+)	VIOLET/WHITE	26
OUTPUT G (-)	VIOLET/BLACK	26
RS232 Rx	GREEN/BLACK	26
RS232 Tx	GREEN/WHITE	26
RS232 Common	BROWN	26
Enc. A Out	BLUE/WHITE	26
Enc. B Out	BLUE/BLACK	26
Enc. Common	BROWN	26
CONTROL PWR IN (-)	BLACK	26
CONTROL PWR IN (+)	RED	26

SHIELD AND DRAIN WIRES DO NOT CONTACT CIRCUIT BOARD OR CONNECTOR SHELL

SMDEVPACK-D

SMDEVPACK-D is the introductory development package for the Animatics SmartMotor™. It is highly recommended for first time users and developers alike.

SMDEVPACK-D includes:

- UG-SM: Animatics SmartMotor User's Guide
- CD-SMI: SMI (Smart Motor Interface) software CD
- CBLSM1-3M: Power-Communications Cable
- KITSMDC3: D-Sub Connector kit
- KITDC1: DC power supply connector kit

NOTE: Connector kits above include all parts below on this page with exception of KITDC3

KITSMDC3

Part	Description	Qty.
CN132	Connector, Male, 15 Pin D-sub NOTE: for I/O Connector	1
P104	Pin Contact Contact Size 20 Crimp Type, 24-20 AWG	20
CN141	Connector, 7W2 Combination 7 Pin DB-15 Shell Size 2	1
CN142	Socket Contact Solder Cup 14 AWG for 7W2 Combo Connector	2
CN149	Connector Hood For DB-15 Shell Size, EMI/Magnetic Shielded	1
P121	Pin Contact, Female Contact Size 20 Crimp Type, 24-20 AWG	20
CN121V	Connector, Female 9 Pin D-Sub	1
CN161	Connector Hood For DB-9 Shell Size EMI/Magnetic Shielded	2

KITDC1

Part	Description	Qty.
CN114	Connector Shroud/Hood	1
CN119	4-Pin Connector NOTE: For enclosed Power Supplies & Shunts	1
P102	Pin, Crimp Type, Male 16-18AWG	4

KITDC3

Part	Description	Qty.
KITDC3	4-Pin Molex Communication Connector Kit NOTE: Includes 4 female crimp pins	1

DIN-RS232 See page 78 for details

Isolated RS232

Breakout to up to 8 motors

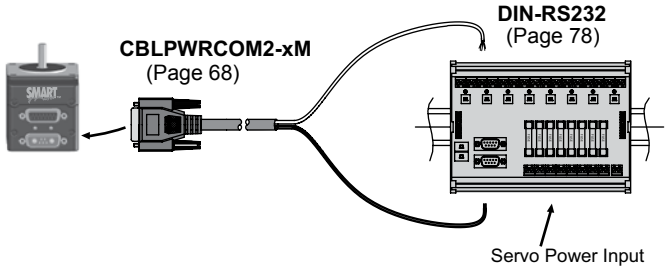

OPTO2 See page page 76 for details

Conversion of 5V I/O to 24 VDC Logic

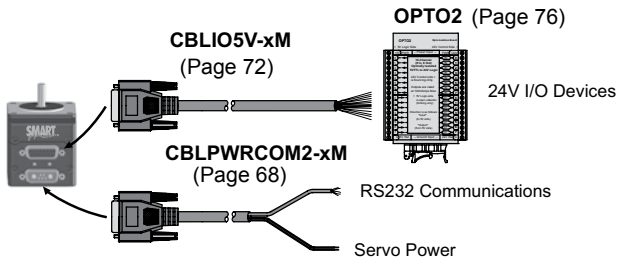

DINIO7 See page 77 for details

Standard I/O Connector

Breakout Board

Accepts up to 7 standard industrial solid state relays

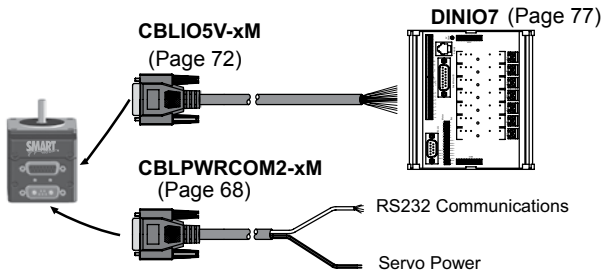

DINIO-RS485 See page 79 for details

16 Channel expanded I/O

8 Inputs 24 VDC Isolated

8 Outputs 24 VDC Isolated

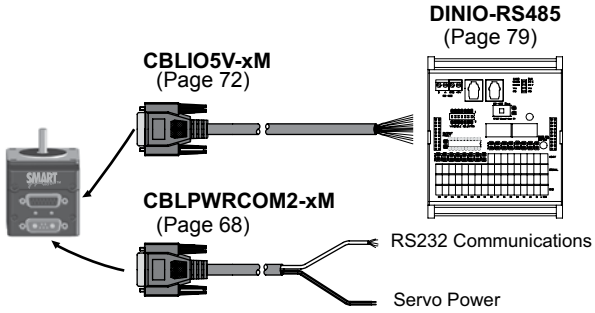

AniLink™ I/O Devices See pages 80-81 for details

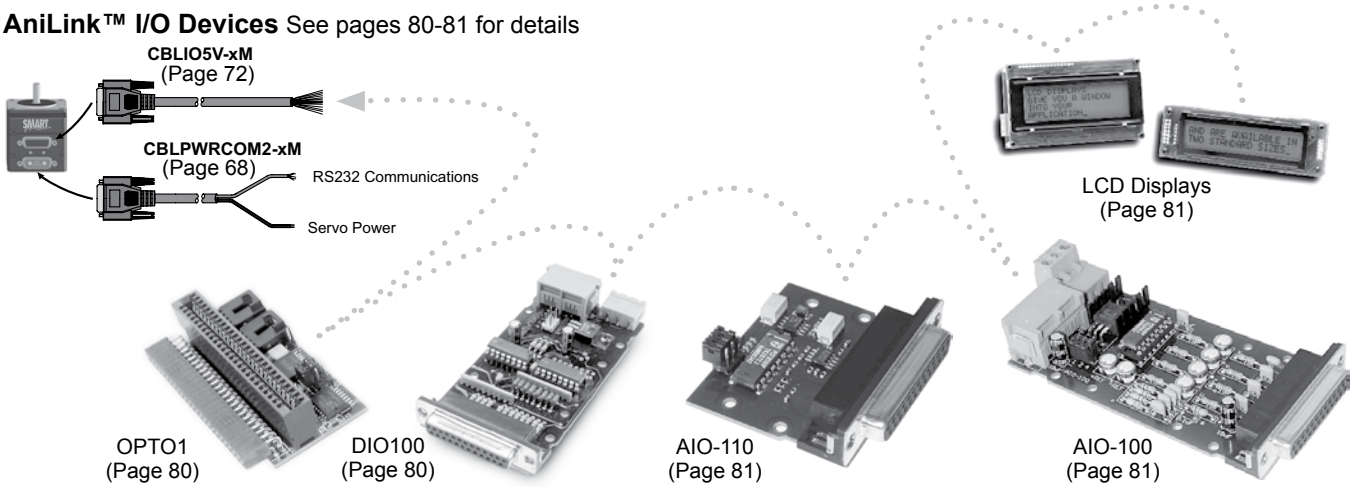

Animatics OPTO2 — 16 Channel Opto-isolator Board

Optically isolates and converts signals between:

5VTTL logic and 24VDC Control Logic Systems

- 8 Input Channels
- 8 Output Channels
- Red Fail-Safe LED Indications
- Plug-in connectors
- DIN Rail Mount
- Only 0.84 Inches of rail space
- Shunt Diode protection for Inductive loads

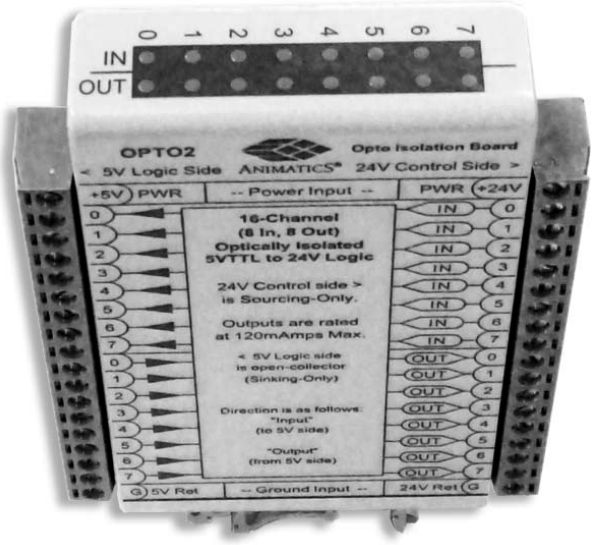

5VDC Logic Side:

- Darlington Output Sinking
- 6.8VDC max input
- 120mAmp Max. 5VDC Load

24VDC Control Side:

- Darlington Output Sourcing
- 12 to 32VDC Working Range
- 120mAmp Max. Load @24VDC

Timing:

- 100 µSecond On/Off max.
- Max. continuous throughput:
  250KHz @50% duty cycle square wave.

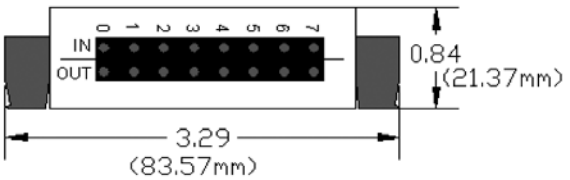

Sample Schematic of Inputs and Outputs:

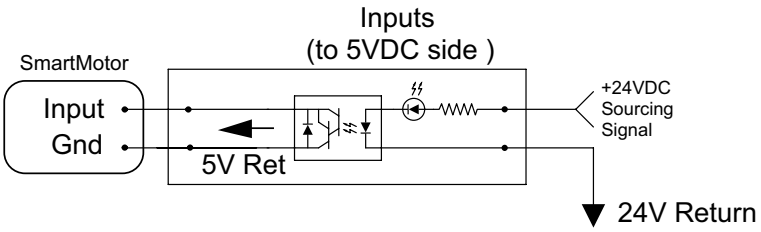

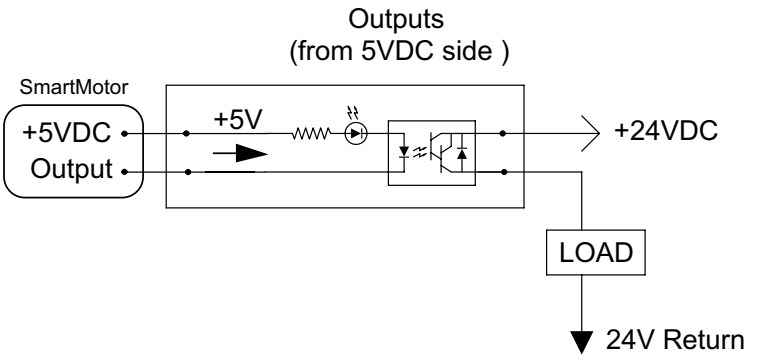

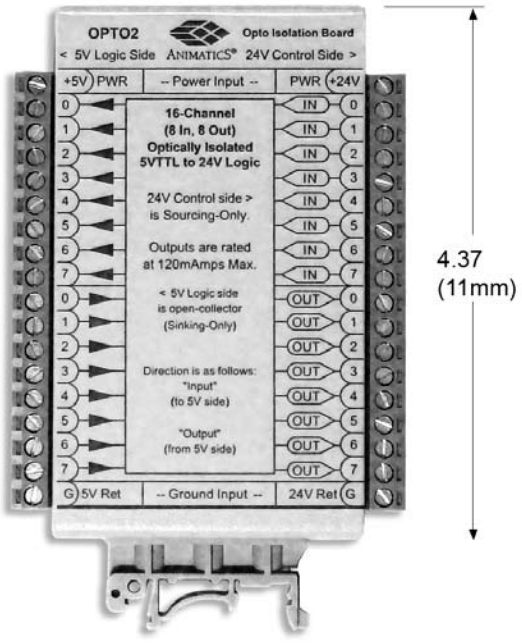

Animatics Corporation • All integrated motor products made by Animatics are covered by patent number 5,912,541

DINIO7

The **DINIO7** is a DIN Rail mount adapter that allows the Animatics SmartMotor™ to easily interface with popular Input/Output blocks like those produced by Gordos, Grayhill, OPTO-22™ and other manufacturers.

The DINIO7 has slots for seven industry standard OPTO Modules and can be used with either input or output modules.

The DINIO7 has a 9 pin connector for direct connection to a personal computer serial RS232 communications port and an AniLink™ network connector. It is also equipped with an expansion bus to allow it to interface with other Animatics DIN rail mount adapters. Wiring Input/Output up to your Animatics SmartMotor™ is made simple with the DINIO7 breakout board.

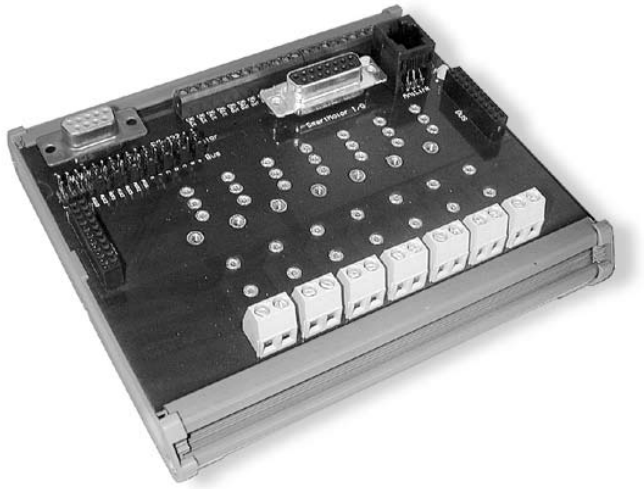

* Please consult with appropriate manufacturer for details

Cross Reference To Compatible Opto Modules

Mfg.*	DC Input	DC Output	AC Input	AC Output
Opto-22	G4-IDC5	G4-ODC5	G4-IAC5	G4-OAC5A
Grayhill	70G-IDC5	70G-ODC5A	70G-IAC5A	70G-OAC5A
Crydom	X4IDC5	X4ODC5	X4IAC5	X4OAC5
Gordos/ Crouzet	C4-IDC5	C4-ODC5	C4-IAC5	C4-OAC5
	(3-32VDC high side)		(120VAC high side)	

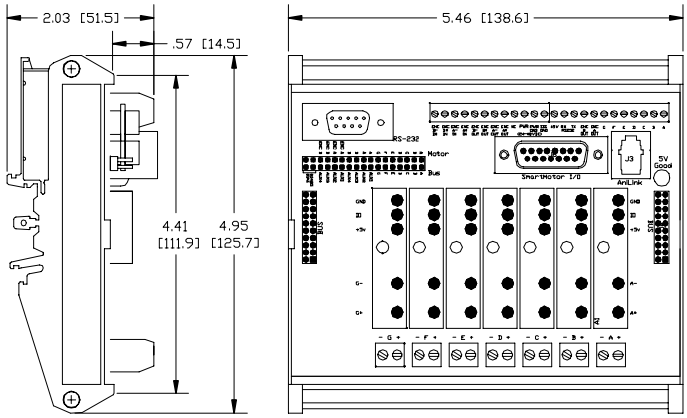

** All sizes are given in inches, sizes in brackets are in mm*

Features	Benefits
DB-15 or screw terminal access to your SmartMotor	Easy connection for panel environment
AniLink port for expansion to other AniLink devices	Cascadable
7 main I/O buses to cross connect I/O to other motors	Flexible use
Aux buses to interconnect encoders between motors	Simplifies encoder connections
Jump-in RS485 terminal resistors	No added parts necessary for RS485 termination
On board DB-9 for fast RS232 access	May be used with standard RS232 extension cables

DIN-RS232

The **DIN-RS232** is a DIN Rail Mount breakout for the OEM and Legend Series RS232 communications. It allows a single Master to communicate with up to eight Animatics SmartMotors over RS232 without the loss of bandwidth typical of daisy chain propagation. Since this operation is nearly identical to the operation of an RS485 bus, the DIN-RS232 can also accommodate an RS485 master.

The DIN-RS232 master communications circuitry can take its power from any industry standard 24V power supply. The eight communications links to each of the Animatics SmartMotor™ breakouts are electrically isolated from the master, and are individually powered by its associated SmartMotor. This isolation can be critical to reliable systems where there may be ground bounce in the power runs between the motors.

The DIN-RS232 is able to transmit simultaneously to eight SmartMotors because all of the links are in parallel. This means that the eight transmit and receive lines are functionally tied together. For this reason, the user must treat the eight SmartMotors on this unit as if they were on a parallel communications bus, like RS485. While the user can transmit to all SmartMotors on the bus simultaneously, care must be taken to assure that no two SmartMotors reply at the same time. The DIN-RS232 also has a fused power bus to allow the convenient connection of SmartMotors to a central power input.

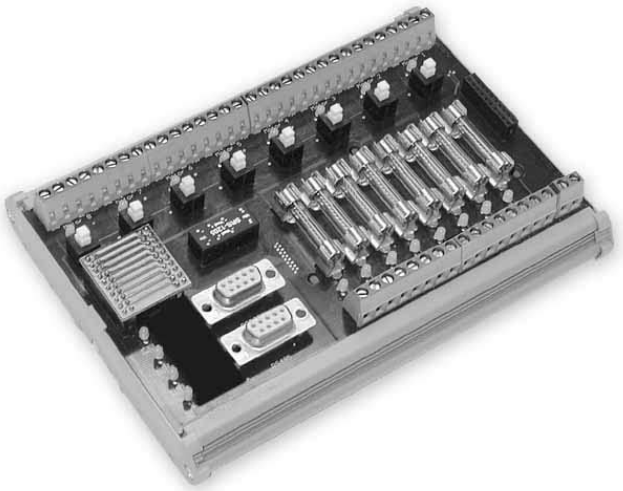

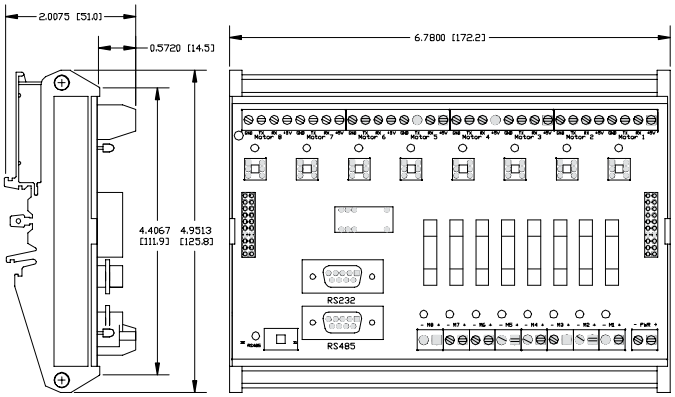

* All sizes are given in inches, sizes in brackets are in mm

Features	Benefits
Eight RS-232 communications ports	Isolated interface to eight SmartMotors without daisy chain propagation delay penalty.
Power bus	Fused interconnection to up to eight SmartMotors.
Selectable Master	Choose RS232 or RS485 to be the communications Master

Electrical

Power bus line voltage:	19V to 48VDC
Isolated communications bus power:	4.5V to 5.5V, 35 mA

DINIO-RS485

The **DINIO-RS485** is a DIN Rail Mount, 16 channel (8 inputs and 8 outputs) 24V optically isolated, field addressable, expanded Input/Output board. It communicates over an optically isolated RS485 network, and can be set to baud rates between 2400 and 38400 bps. Each DINIO-RS485 has 2 RJ-45 connectors as well as screw terminal access to allow easy connection of up to 102 blocks (816 inputs and 816 outputs) on a given RS485 network. Communications are via standard PRINT1 commands on Com Port 1 of any Animatics SmartMotor™.

Capabilities include:

- Read an individual input (0 through 815) state
- Read an individual output state
- Set an output state to “ON” (sourcing) or “OFF”
- Read all inputs and outputs on all Input/Output cards present
- Responses are global and are received by any and all Animatics SmartMotors on the RS485 network
- Selectable byte wide responses to array variables
- Selectable single bit/channel responses to the variable z

These capabilities allow for convenient event-driven coding where only a specific input event is needed to trigger another event across any Animatics SmartMotor on the bus.

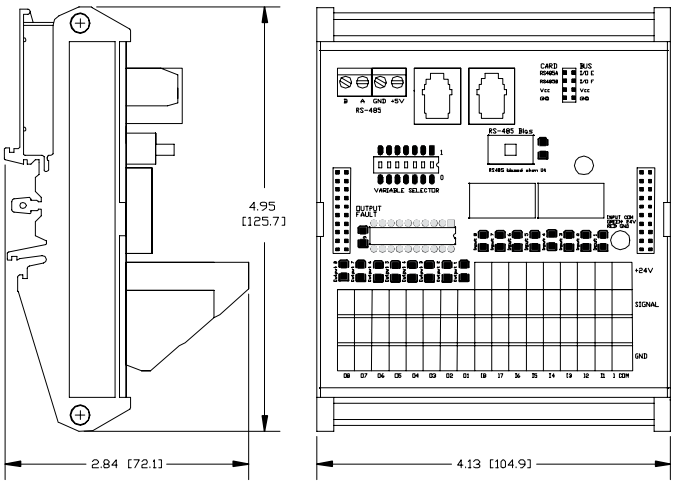

* All sizes are given in inches, sizes in brackets are in mm

Features	Benefits
8 Inputs, sink/source user selectable	Byte read capability
8 overload protected sourcing outputs	Byte write capability
+24 and/or ground rail connections on each channel	Input/Output devices are easily and conveniently wired
LED Indications include over-load fault, sink/source selection, and Input/Output channel status	Diagnostics at a glance
Feed-thru Bus	Compatible with other Animatics DIN-rail mount bus products

Electrical

Module input voltage:	12V to 30VDC
Module input current:	200 mA with no outputs active
Nominal input current:	5.7 mA @ 24V
Max output current:	200 mA/channel or 650mA total

OPTO1: Expanded I/O 16 Channel Opto-Rack Adapter

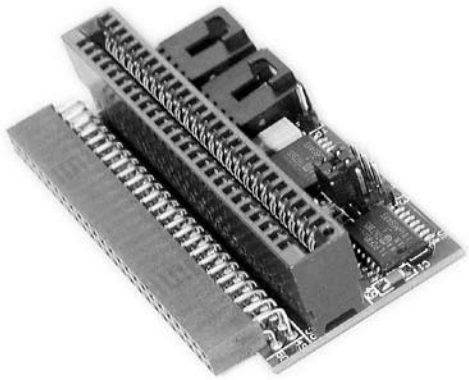

The Animatics OPTO1 is designed to interface directly with industry standard 16 channel OPTO racks, allowing easy expansion into your machine design. Connections for both 50 pin Edge card and dual 50 pin header are included. Each channel can trigger standard Opto-Rack modules up to 20mAmps each. With two configurable 8-bit ports, the OPTO1can be set for all 16 inputs, all 16 outputs, or 8 inputs and 8 outputs.

Up to 4 OPTO1 devices may be used per motor or up to 64 channels of expanded I/O total.

DIO100: Expanded I/O 8-Bit Port Adapter

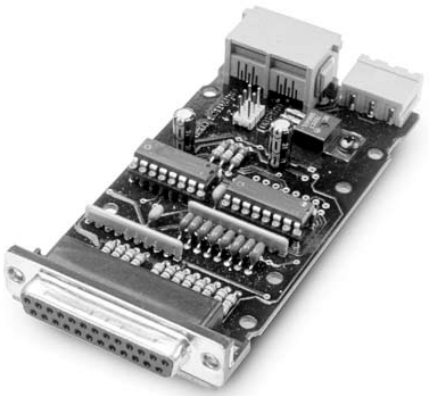

The Animatics DIO100 contains a single addressable 8-bit bi-directional port configured to the same spec as a standard Printer Port. Originally designed to enable printing characters to industrial parallel printers, the DIO100 can also be used as bi-directional 8-channel I/O expander.

Up to 8 DIO100 devices may be used per motor or up to 64 channels of expanded bi-directional I/O total.

LCD2X20 LCD4X20: LCD Displays w/Backlight

Each of the Animatics LCD displays have adjustable backlight. They are intended as OEM level displays for use in embedded machine designs. Both readily accept PRINTA commands for printing standard ASCII character sets to the screen. Maximum power per unit is 100mAmps with 20mAmps for the backlight.

They can be powered directly from the Animatics SmartMotor 5VDC supply pin or from an external 6 to 24VDC source.

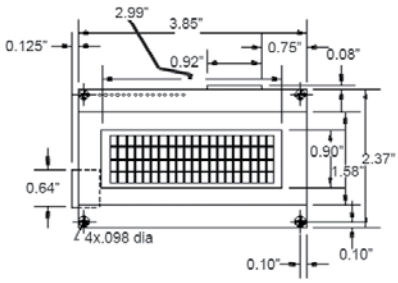

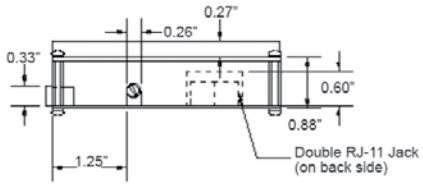

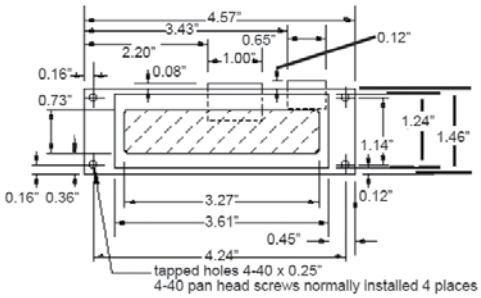

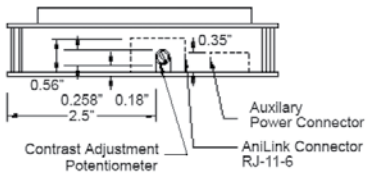

AIO-100: Analog I/O , 4 Input, 1 Output

4 Input channels 0-5VDC 8-bit resolution with Hardware Zero Reference Adjustment.

1 Output channel 0-5VDC 8-bit resolution with Hardware High/ Low reference adjustment.

Up to 4 addressable AIO100 devices may be used per motor.

Powered from Animatics SmartMotor 5VDC supply or external 6-24VDC.

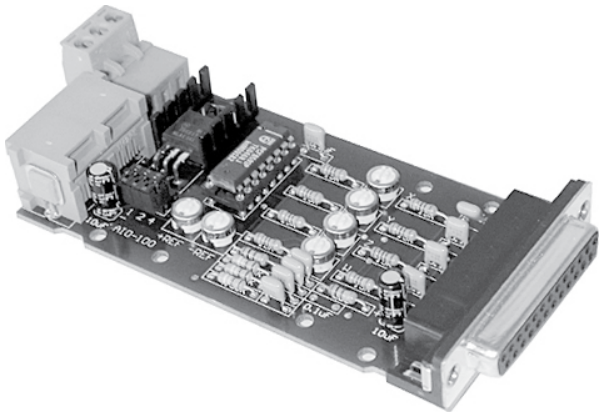

AIO-110: Analog I/O, 4 Input, 1 Output

3 Input channels 0-5VDC 8-bit resolution.

1 Input channel 0-10VDC 8-bit resolution.

1 Output channel 0-10VDC 10-bit resolution.

Up to 4 addressable AIO110 devices may be used per motor.

Powered from Animatics SmartMotor 5VDC supply only.

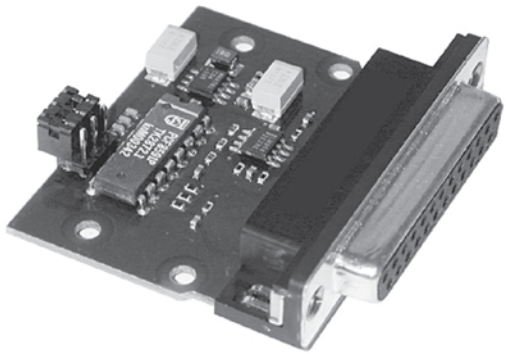

SmartBox™: Handheld Diagnostics and Testing Interface is designed as an aid in test and development of Animatics SmartMotor™ applications. The SmartBox™ is small and compact in size but it offers big returns in convenience and time savings. Its portability and simple operation make it ideal for use at remote locations to run SmartMotor's functions and for onsite testing.

The SmartBox Hardware consists of:

- Two-Color LED connected to Port C Output can be programmed for 3 states: OFF, ON (Green), or ON (Red)
- Three Position Toggle Switch (Go)-Off-(Sel.) spring return to center
- Analog Input Potentiometer Connected to Port D
- External Encoder Input w/1000 line encoder
- 4 Red LEDs, in two sets wired reverse parallel to Ports E and F to allow for any or all to be turned on or off.
- Cable with 15 pin D-sub I/O connector
- Power Input Jack on side (2.1x5mm)

Sample SmartMotor™ program available:

Select from a variety of pre-programmed modes using the Selector switch w/LED indication of Mode corresponding to the label on the side of the unit.

- This program allows simulation of the following:
- Mode Follow at 1:1 counts V following Encoder Knob
- Position Mode (Adjustable absolute commanded position)
- Velocity Mode (Continuously variable, bi-directional)
- Torque Mode (Continuously variable, bi-directional)
- Relative Mode (Adjustable distance)
- Fast Indexing (Self triggered with adjustable distance and dwell)
- CAM Mode
- Variable Gearing (Continuously adjustable gear ratio)
- Preset Moves (Pre-programmed multi-move profiles)

The SmartBox can test and demonstrate the following hardware connections including:

- Analog input
- Digital I/O
- Step and direction Input
- Encoder I/O

Note: Demonstration Program available for download at www.animatics.com.

Side and Back Cover Labels:

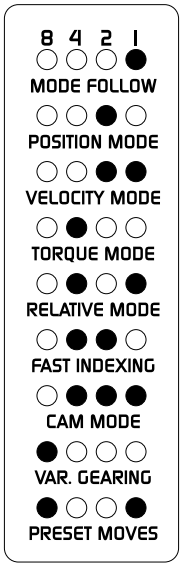

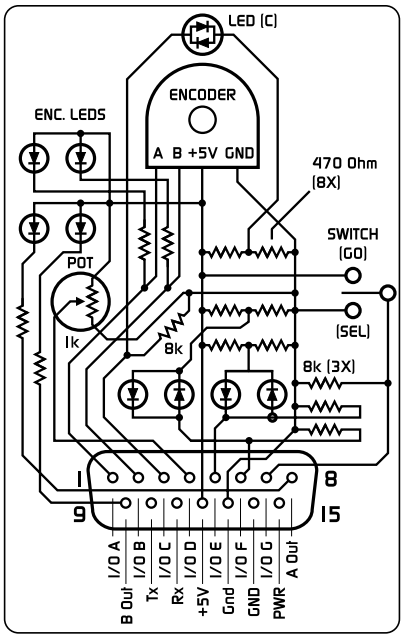

Mode Indicator Legend and schematic are printed on the SmartBox for easy reference

SmartBoxBCD™: Designed for Use with SmartSelect™ Software!

Handheld Diagnostics and Testing Interface, similar to standard Animatics SmartBox, but is geared towards PLC I/O handshake simulation. It is intended for use as a means to simulate 5 inputs from a PLC and 2 outputs back to the PLC to aid in development of applications where only On/Off I/O triggering is used to control the SmartMotor™.

The SmartBoxBCD Hardware consists of:

- Two Bi-Color LEDs; one each connected to Ports E and F. Each can be set one of three states: OFF, ON (Green), or ON (Red)
- Five Three-Position Toggle Switches (On)-Off-(Momentary-On.) where center position is off. Connected to Ports A, B, C, D, and G
- Cable with 15 pin D-sub I/O connector
- Power Input Jack on side (2.1x5mm)

When used with SmartSelect™ Software:

The SmartBoxBCD interface simulates:

4-bit binary Input from a PLC	on ports A, B, C, and D
"Go" input from a PLC	on Port G
Busy Output to PLC	on Port E
Fault Output to PLC	on Port F

When the Motor receives a "Go" signal, the program responds to 1 of 16 preset move profiles as determined by the 4-bit binary input state of Ports A, B, C, and D. While moving, the "Busy" LED is Red, once done, it switches to Green. If a Fault occurs, the Fault LED switches from Green to Red.

The SmartBoxBCD allows complete set-up and test of a SmartMotor in conjunction with the Point-And-Click SmartSelect™ Programming Tool. In doing so, the entire Servo Control of a system can be set up and tested prior to PLC Programming or I/O connections. As a result, machine development time is reduced to a minimum.

Back Cover Label Shows internal Schematic:

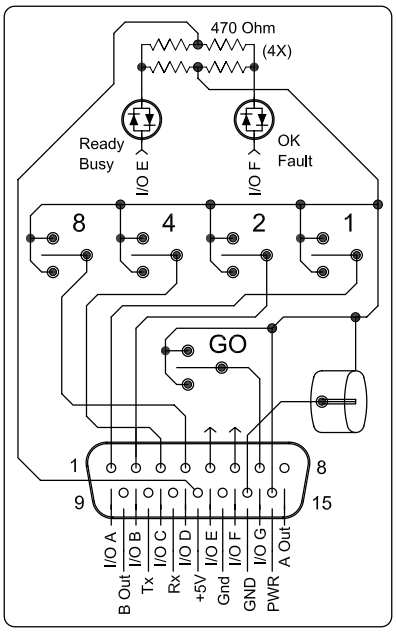

Which is better, Linear or Switcher Supplies?

Since Servo Motors are inductive they may run highly dynamic motion profiles. As a result, their current demand can vary widely. Surge currents from stand-still to maximum load may be extremely high, yet steady state current demand over time may be relatively mild. As a result, proper care should be taken when selecting power supplies.

Animatics offers two basic types of power supplies.

The chart to the right gives a brief comparison of the two types of supplies.

	Linear	Switcher
AC Input	Field selectable (120/240VAC)	Universal 90-240VAC
Power Factor Corrected	No	Yes
Relative Size	Big and bulky	Lightweight
Cooling	Ambient convection	Fan cooled
Surge Capacity	400%	5%
Voltage Regulation	15% Drop over range	0%, Fixed
Shunt Required ? [1]	Occasionally, but not typically	In most cases, highly recommended!

[1] **See Shunt Section for more information!**

As seen in the graph to the right, Linear (Unregulated) supplies can handle large surge current loads. This is because Linear Supplies typically contain large output capacitors to handle those surges well.

Voltage regulation: Switchers are highly regulated supplies. They will maintain fixed voltage until they reach maximum load and then will “crowbar” to zero volts to protect the output stages. Linear supplies will slowly drop in output voltage while supplying more and more current.

This is the most fundamental difference between switchers and unregulated supplies.

Even though a switcher cannot handle the higher current surges, if it can output as much current as you would expect for a given servo application, then they will actually help the servo accelerate much faster because system voltage will be maintained at maximum level.

However, if your servo application requires surge currents in excess of 50 Amps or more, the switchers may not be cost effective. Getting 50 amps from an Animatics 20 Amp supply is easy. Getting 50 Amps from Animatics switchers would require placing multiple units in parallel, so it may not be cost effective to do so.

Voltage Drop Comparison

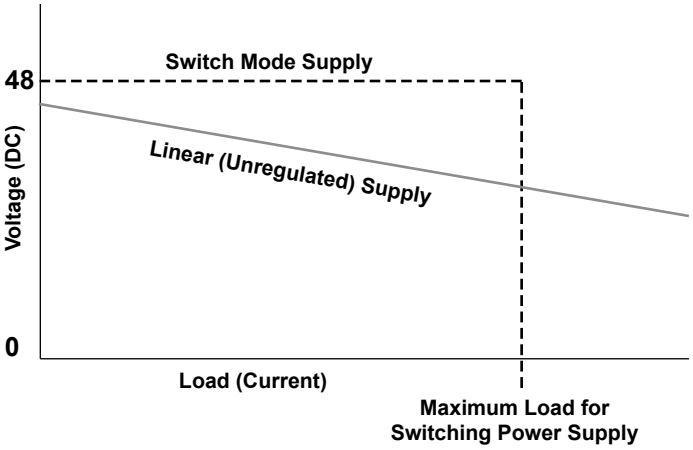

Animatics Corporation • All integrated motor products made by Animatics are covered by patent number 5,912,541

Power Supplies:

- Linear Unregulated
- AC Input, DC output
- Screw Terminal Access
- Toroid Transformer for lower EMI

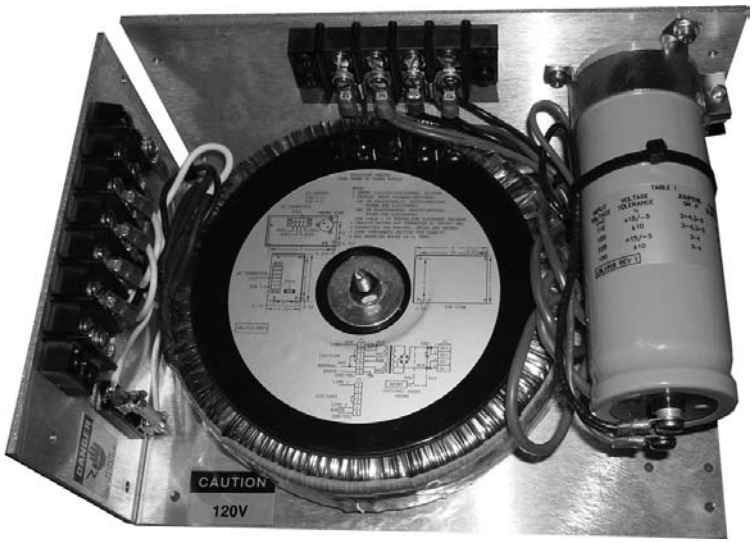

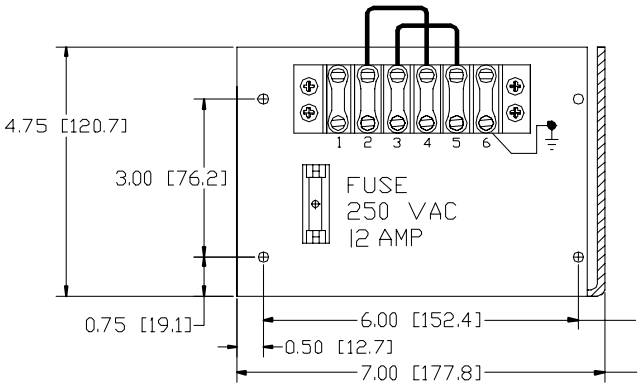

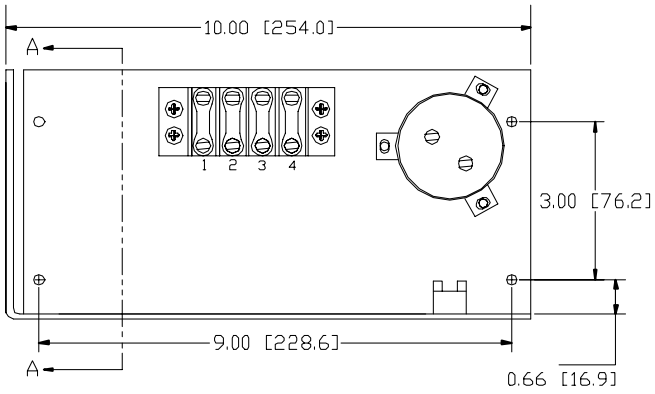

All sizes are given in inches, sizes in brackets are in mm

Part Number	Input Voltage and Frequency	No Load Output Voltage	Full Load Output		Nominal Wattage	Shunt	Weight(Nom.)
			Voltage	Current			
PS42V20AF110	120VAC 50/60Hz	44VDC	35VDC	20 Amps	680 W		16.5 lbs (7.5kg)
PS42V20AF220	240VAC 50/60Hz	44VDC	35VDC	20 Amps	680 W		16.5 lbs (7.5kg)
PS42V20AF110-S1	120VAC 50/60Hz	44VDC	35VDC	20 Amps	680 W	100 W	17 lbs (7.7kg)
PS42V20AF220-S1	240VAC 50/60Hz	44VDC	35VDC	20 Amps	680 W	100 W	17 lbs (7.7kg)
PS42V20AF110-S2	120VAC 50/60Hz	44VDC	35VDC	20 Amps	680 W	200 W	17 lbs (7.7kg)
PS42V20AF220-S2	240VAC 50/60Hz	44VDC	35VDC	20 Amps	680 W	200 W	17 lbs (7.7kg)

PFC500W-48 Features

- Universal AC input / Full range
- Built-in active PFC function, PF>0.95
- Protections: Short circuit / Overload/ Over voltage / Over temperature
- Forced air cooling by built-in DC fan
- Built-in cooling Fan ON-OFF control
- Built-in remote ON-OFF control
- Built-in remote sense function
- Fixed switching frequency at 110KHz
- 2 years warranty

OUTPUT	DC VOLTAGE	48V
	RATED CURRENT	10A
	CURRENT RANGE	0 ~ 10A
	RATED POWER	480W
	RIPPLE & NOISE (max) Note.2	3--mVp-p
	VOLTAGE ADJ. RANGE	41 ~ 56V
	VOLTAGE TOLERANCE Note.3	± 1.0%
	LINE REGULATION	± 0.5%
	LOAD REGULATION	± 0.5%
	SETUP, RISE TIME	1500ms, 50ms at full load
	HOLD UP TIME (Typ.)	24 ms at full load
INPUT	VOLTAGE RANGE Note.5	88 ~ 264VAC 124 ~ 370VDC
	FREQUENCY RANGE	47 ~ 63Hz
	POWER FACTOR (Typ.)	PF>0.95/230VAC PF>0.95/115VAC at full load
	EFFICIENCY(Typ.)	87%
	AC CURRENT (Typ.)	7A/115VAC 3.5A/230VAC
	INRUSH CURRENT (Typ.)	18A/115VAC 36A/230VAC
PROTECTION	OVER VOLTAGE	57.6 ~ 67.2V
FUNCTION	REMOTE CONTROL	RC+/RC-: Short = power on ; Open = power off
	WORKING TEMP.	-10 ~ +50 °C (Refer to output load derating curve)
	WORKING HUMIDITY	20 ~ 90% RH non-condensing
ENVIRONMENT	STORAGE TEMP., HUMIDITY	-20 ~ +85°C, 10 ~ 95% RH
SAFETY & EMC (Note 4)	SAFETY STANDARDS	UL60950-1, TUV EN60950-1 approved
	WITHSTAND VOLTAGE	I/P-O/P:3KVAC I/P-FG:1.5KVAC O/P-FG:0.5KVAC
	ISOLATION RESISTANCE	I/P-O/P, I/P-FG, O/P-FG:100M Ohms/500VDC
	EMI CONDUCTION & RADIATION	Compliance to EN55022 (CISPR22) Class B
	HARMONIC CURRENT	Compliance to EN61000-3-2,-3
	EMS IMMUNITY	Compliance to EN61000-4-2,3,4,5,6,8,11; ENV50204, light industry level, criteria A
OTHERS	MTBF	133.4K hrs min. MIL-HDBK-217F (25°C)
	DIMENSION	170*120*93mm (L*W*H)
NOTE	1. All parameters NOT specially mentioned are measured at 230VAC input, rated load and 25°C of ambient temperature. 2. Ripple & noise are measured at 20MHz of bandwidth by using a 12" twisted pair-wire terminated with a 0.1uf & 47uf parallel capacitor. 3. Tolerance: includes set up tolerance, line regulation and load regulation. 4. The power supply is considered a component which will be installed into a final equipment. The final equipment must be re-confirmed that it still meets EMC directives. 5. Derating may be needed under low input voltages. Please check the derating curve for more details. 6. See page 92 for shunts.	

Mechanical Specifications

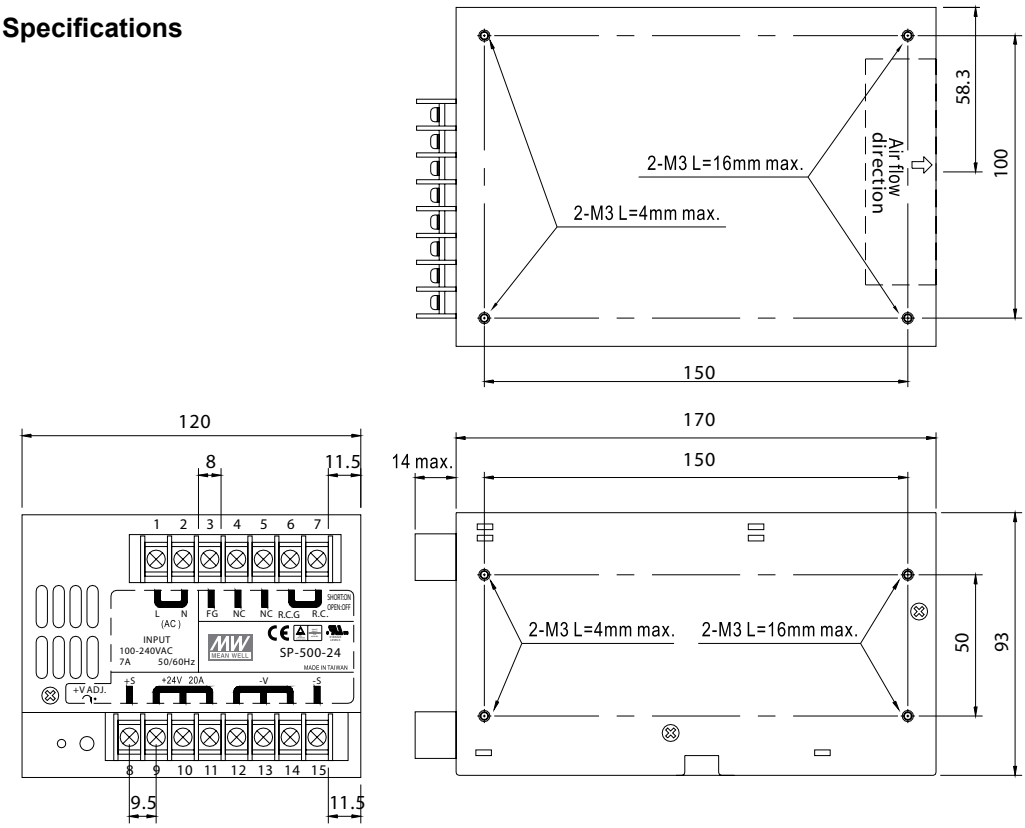

Terminal Pin No. Assignment

Pin No.	Assignment	Pin No.	Assignment
1	AC/L	7	R.C.
2	AC/N	8	+S
3	FG ⏚	9~11	DC OUTPUT +V
4,5	NC	12~14	DC OUTPUT -V
6	R.C.G	15	-S

Output Derating vs. Input Voltage

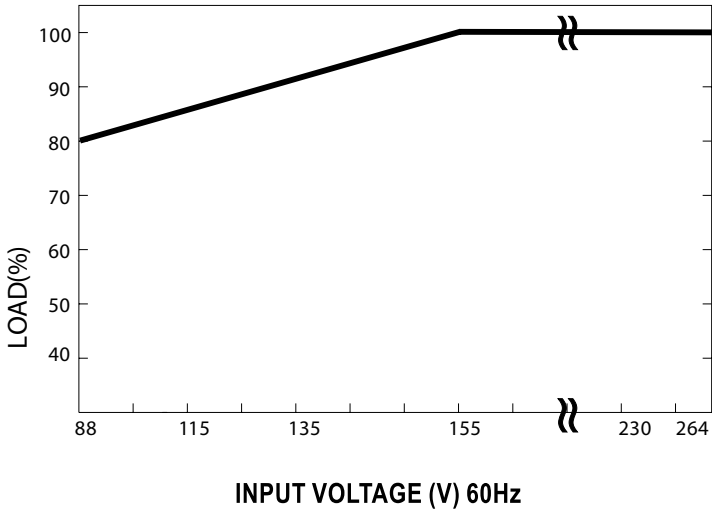

⚠ WARNING

The switcher supplies have an adjustable output trim pot. The output voltage MUST BE adjusted to <=48VDC.

PFC1500W-48 Features:

- Universal AC input / Full range
- AC input active surge current limiting
- Built-in active PFC function, PF>0.95
- Protections: Short circuit / Overload/ Over voltage / Over temperature
- Forced air cooling by built-in DC fan
- Built-in cooling fan ON-OFF control
- Built-in remote ON-OFF control
- Built-in remote sense function
- 2 year warranty

NOTE: Multiple units may be paralleled for additional power

OUTPUT	DC VOLTAGE	48V
	RATED CURRENT	32A
	CURRENT RANGE	0 ~ 32A
	RATED POWER	1536W
	RIPPLE & NOISE (max) Note.2	200mVp-p
	VOLTAGE ADJ. RANGE	43 ~ 56V
	VOLTAGE TOLERANCE Note.3	± 1.0%
	LINE REGULATION	± 0.5%
	LOAD REGULATION	± 0.5%
	SETUP, RISE TIME	1500ms, 100ms at full load
	HOLD UP TIME (Typ.)	16 ms at full load
INPUT	VOLTAGE RANGE Note.5	88 ~ 264VAC 124 ~ 370VDC
	FREQUENCY RANGE	47 ~ 63Hz
	POWER FACTOR (Typ.)	0.95/230VAC 0.98/115VAC at full load
	EFFICIENCY(Typ.)	91%
	AC CURRENT (Typ.)	17A/115VAC 8A/230VAC
	INRUSH CURRENT (Typ.)	30A/115VAC 60A/230VAC
	LEAKAGE CURRENT	<2.0mA/240VAC
PROTECTION	OVERLOAD Note.5	105 ~ 135% rated output power
		Protection type: Constant current limiting unit will shut down o/p voltage after 5 sec. Re-power to recover
	OVER VOLTAGE	57.6 ~ 67.2V
		Protection type: Shut down o/p voltage, recover automatically after temperature goes down
	OVER TEMPERATURE	95°C ± °5C detect on heatsink of power transistor
		Protection type: Shut down o/p voltage, recovers automatically after temperature goes down
FUNCTION	AUXILIARY POWER (AUX)	12V@0.1A (Only for Remote ON/OFF control)
	REMOTE CONTROL	RC+/RC-: Short = power on ; Open = power off
	WORKING TEMP.	-10 ~ +50 °C (Refer to output load derating curve)
	WORKING HUMIDITY	20 ~ 90% RH non-condensing
ENVIRONMENT	WORKING TEMP.	-20 ~ +70°C (Refer to output load derating curve)
	WORKING HUMIDITY	20 ~ 90% RH non-condensing
	STORAGE TEMP., HUMIDITY	-40 ~ +85°C, 10 ~ 95% RH
	TEMP. COEFFICIENT	± 0.5%/°C (0 ~ 50 °C)
	VIBRATION	10 ~ 500Hz, 2G 10min./1cycle, 60min. each along X,Y,Z axis
SAFETY & EMC (Note 4)	SAFETY STANDARDS	UL60950-1, TUV EN60950-1 approved
	WITHSTAND VOLTAGE	I/P-O/P:3KVAC I/P-FG:1.5KVAC O/P-FG:0.5KVAC
	ISOLATION RESISTANCE	I/P-O/P, I/P-FG, O/P-FG:100M Ohms/500VDC
	EMI CONDUCTION & RADIATION	Compliance to EN55022 (CISPR22)
	HARMONIC CURRENT	Compliance to EN61000-3-2,-3
	EMS IMMUNITY	Compliance to EN61000-4-2,3,4,5,6,8,11; ENV50204, light industry level, criteria A
OTHERS	MTBF	62.6K hrs min. MIL-HDBK-217F (25°C)
	DIMENSION	278*127*83.5mm (L*W*H)
	PACKING	2.6Kg: 6PCS/16.6Kg/1.54CUFT
NOTE	1. All parameters NOT specially mentioned are measured at 230VAC input, rated load and 25°C of ambient temperature. 2. Ripple & noise are measured at 20MHz of bandwidth by using a 12" twisted pair-wire terminated with a 0.1uf & 47uf parallel capacitor. 3. Tolerance: includes set up tolerance, line regulation and load regulation. 4. The power supply is considered a component which will be installed into a final equipment. The final equipment must be re-confirmed that it still meets EMC directives. 5. Derating may be needed under low input voltages. Please check the derating curve for more details. 6. See page 92 for shunts.	

Mechanical Specifications

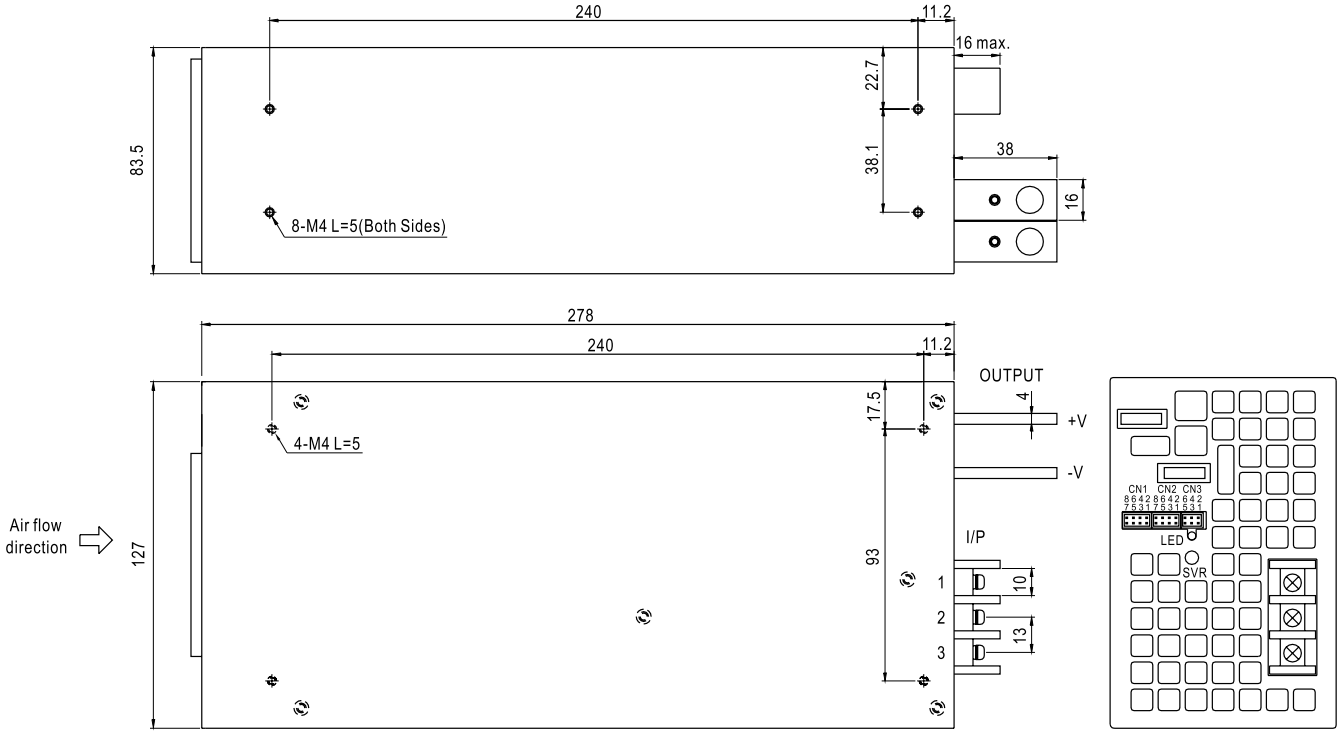

AC Input Terminal Pin No. Assignment

Pin No.	Assignment
1	FG ⏚
2	AC/N
3	AC/L

Control Pin No. Assignment(CN1,CN2) : HRS DF11-8DP-2DS or equivalent

Pin No.	Assignment	Pin No.	Assignment	Mating Housing	Terminal
1	RCG	4	TRIM	HRS DF11-8DS or equivalent	HRS DF11-**SC or equivalent
2	RC2	6	LS(Current Share)		
3,5,7	-S	8	+S		

RCG: Remote ON/OFF Ground
RC2: Remote ON/OFF
-S : -Remote Sensing

TRIM: Adjustment of Output Voltage
LS: Load Share
+S: +Remote Sensing

Control Pin No. Assignment(CN3) : HRS DF11-6DP-2DS or equivalent

Pin No.	Assignment	Pin No.	Assignment	Mating Housing	Terminal
1	P OK GND	4	AUXG	HRS DF11-6DS or equivalent	HRS DF11-**SC or equivalent
2	P OK	5	RC1		
3	RCG	6	AUX		

P OK GND: Power OK Ground
P OK: Power OK Signal
RCG: Remote ON/OFF Ground

AUXG: Auxiliary Ground
RC1: Remote ON/OFF
AUX: Auxiliary Output

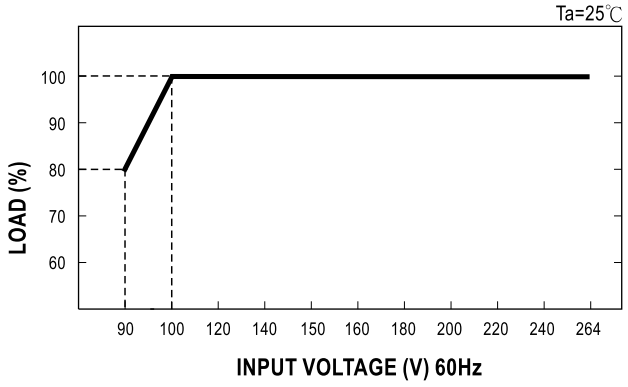

⚠ WARNING

The switcher supplies have an adjustable output trim pot. The output voltage MUST BE adjusted to <=48VDC.

Enclosed DC Power Supplies

- Enclosed linear unregulated power supplies
- PC-type AC power cord
- 4 pin AMP connector on output
- Internally fused on both primary and secondary side
- Toroid transformer for minimal voltage drop and minimal EMI

Includes AC Power Cord and KITDC1 connector kit (see page 74)

Part Number	Input Voltage	Hz AC	No Load Voltage	Full Load		Nominal Wattage	Weight (Nom.)
				Voltage	Current		
PS24V8AG-110	110VAC	60	25 VDC	19 VDC	8 Amps	152 W	6.5 lbs (3 kg)
PS42V6AG-110	110VAC	60	46 VDC	38.7 VDC	6.5 Amps	251 W	7 lbs (3.2 kg)
PS42V6A-220CE	220 VAC	50-60	46 VDC	38.7 VDC	6.5 Amps	251 W	7 lbs (3.2 kg)

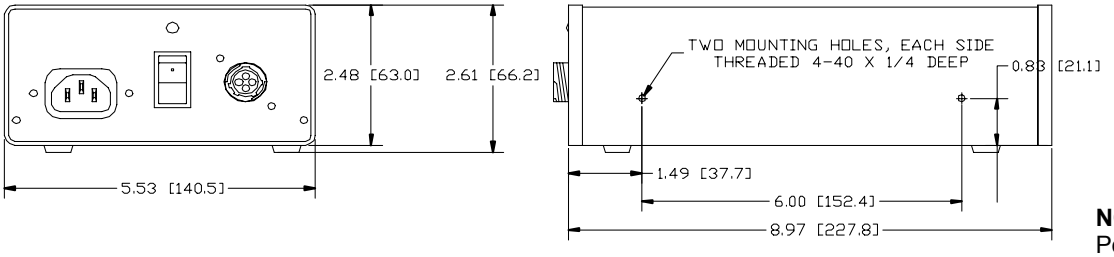

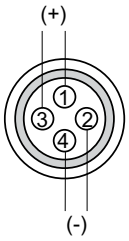

NOTE: Either pair of Power Pins can handle full load rating

* All sizes are given in inches, sizes in brackets are in mm

PWR116V

Enclosed Laptop Type Power Supply

This Power Supply connects directly to:

- CBLSM1-DEMO
- SmartBox™
- SmartBoxBCD™

It is ideal for desktop testing of SmartMotors™ and will easily run an unloaded SmartMotor for programming and evaluation testing.

Input:	120-240VAC 50/60Hz
Output:	24VDC, 2.1Amps, 50 Watts
Connector Type:	2.1x5mm coax DC Power Connector
Cable Length	~1meter

RoHS/CE Certified

CBLAC4

AC Power Cable for PWR116V Power Supply above.

Standard 2 prong US AC plug

~1 Meter length

Introduction to Shunts

Animatics Corporation offers several shunt options for use with DC input servo motors.

Shunts are needed to protect the servo controller and drive stages from over voltage.

Over voltage sources originate from the following:

- Back EMF due to back driving the motors
- Sudden or hard decelerations
- Hard stop crashes (immediate deceleration to zero speed)
- Vertical load drops

The shunts actually add an additional load to the DC bus automatically when voltage exceeds the trigger level by connecting large load resistors across the bus. Trigger voltage is typically 49.5VDC. As a result, the shunts will work with any of the supplies we offer.

⚠ WARNING

The switcher supplies have an adjustable output trim pot. If used with our shunts, the output voltage MUST BE adjusted to <=48VDC to insure the shunts do not stay gated on.

The Real story about Back EMF:

Generally speaking, back EMF is the voltage generated in a motor when it spins. This voltage is typically proportional to speed. However, this is a general rule. The truth is that the back EMF voltage is proportional to the rate of change of magnetic flux in the windings of the stator. As a result, constant speeds produce constant and predictable voltages. However, sudden changes due to decelerations or hard stop crashes cause an immediate change in magnetic flux or even a total instantaneous collapse. As a result, voltages can go 5 to 10 times higher than spinning the motor at its maximum speed.

For this reason alone it is highly recommended to use a shunt in all vertical load applications or any case where the motors could be stopped quickly or back driven suddenly.

We offer both open frame and enclosed shunts in 100Watt and 200Watt capacities. The shunts are all automatic and get their power from the DC bus they are attached to. They simply need to be placed in parallel with the DC bus.

⚠ WARNING

1. Shunts cannot be placed in parallel with each other to increase capacity. The shunt with the slightly lower trigger voltage will trigger first while the other shunt never triggers at all. Please consult factory for information on how to deal with larger shunt requirements.
2. Shunts should always be placed between the motor input and any disconnect or e-stop relay to insure protection of the motor when power is not applied or e-stop relay contacts are open.

SHUNT42V100WOF and SHUNT42V200WOF

- Can be used with Power supplies that have an output of 48VDC or less
- Automatic Gate-On when Voltage Exceeds 49.5VDC
- Easy direct parallel connection to power supply

SHUNT42V100W-OF

SHUNT42V200W-OF

Part Number	TRIGGER VOLTAGE	DROP OUT VOLTAGE	CURRENT DRAW WHEN GATED ON	WATTS	EFFECTIVE BUS LOAD
SHUNT42V100WOF	49.5VDC RISING	48.5VDC FALLING	4 AMPS	100W	12.5 OHMS
SHUNT42V200WOF	49.5VDC RISING	48.5VDC FALLING	8 AMPS	200W	6.25 OHMS

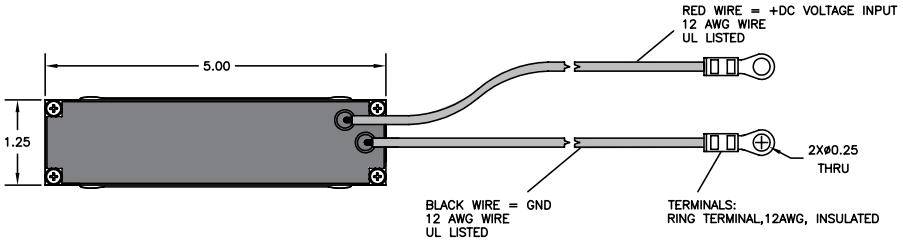

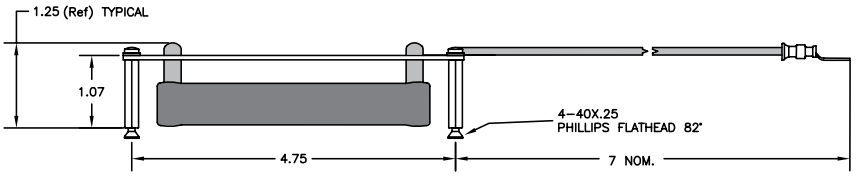

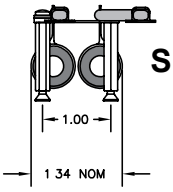

SHUNT42V100WOF

6 CONNECTIONS: RED WIRE +DC VOLTAGE INPUT
BLACK WIRE −DC VOLTAGE INPUT
7 USE PROPER ELECTRICAL SAFETY PRECAUTIONS.
8 ALL DIMENSIONS ARE NOMINAL, UNLESS OTHERWISE SPECIFIED

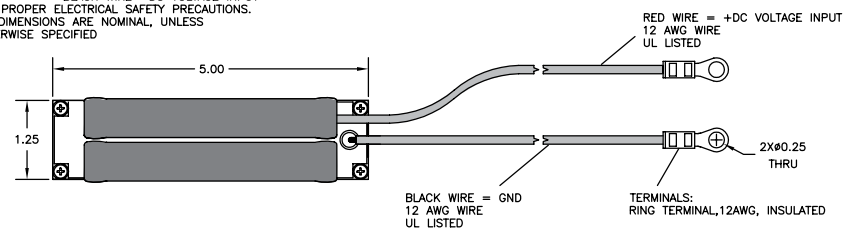

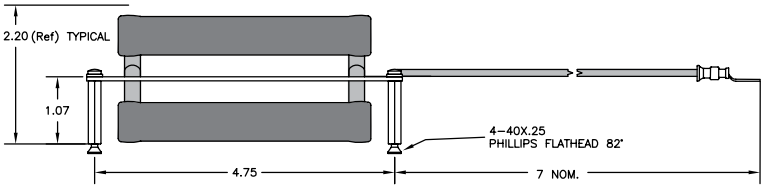

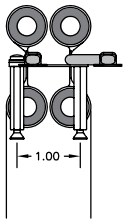

SHUNT42V200WOF

Note: **Any time an E-Stop switch is placed on the DC power line to the motor, a Shunt MUST BE installed between the E-Stop switch and the motor connector to ensure protection against over voltage!**

Warning ! If the shunt is connected to an adjustable power supply, the output voltage MUST BE set at or below 48VDC. If the output voltage is sustained above the trip point of the shunt, over heating and damage may result.

Enclosed Shunts

- Enclosed Shunt
- Matching 4 pin AMP connector to enclosed power supply.
- Automatically gate on at >=49.5VDC
- Powered from DC bus
- May be connected in parallel with any supply <=48VDC.

Part Number	TRIGGER VOLTAGE	DROP OUT VOLTAGE	CURRENT DRAW WHEN GATED ON	WATTS	EFFECTIVE BUS LOAD
SHUNT42V100W	49.5VDC RISING	48.5VDC FALLING	4 AMPS	100W	12.5 OHMS
SHUNT42V200W	49.5VDC RISING	48.5VDC FALLING	8 AMPS	200W	6.25 OHMS

Includes connector kits

Use with cable CBLDC1 below

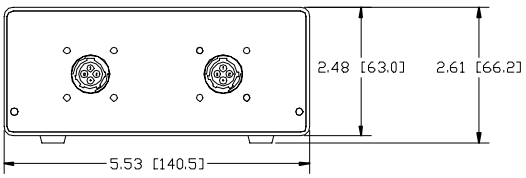

* All sizes are given in inches, sizes in brackets are in mm

Note: Any time an E-Stop switch is placed on the DC power line to the motor, a Shunt MUST BE installed between the E-Stop switch and the motor connector to ensure protection against over voltage!

CBLDC1

Power Supply Cables

Part Number	Connection	Cable Type	Connector Type(s)	Length(s)
CBLAC1	AC Line Cord for power supply	Power	N/A	6 ft (1.8m)
CBLDC1	DC Cable for Enclosed Shunt	DC	4-Pin AMP	1.5ft (0.45M)
CBLSMYPWR-T	Multiple SM - power supply	Y	4 Pin AMP	2 ft (0.61m)

Moment Of Inertia:

A basic understanding of Moment of Inertia serves well in ensuring proper motor sizing. It is one thing to look at static points on torque curves, but it is altogether different when considering the dynamic aspects of loads being accelerated at high rates.

The Inertial mass of an object is a measure of its resistance to a change in its velocity.

The Moment of Inertia of an object is at a point of reference of rotation, which is at the pivot point or axis of rotation.

The Moment of Inertia can therefore be thought of as a measure of the resistance to any change in rotational speed.

For linear systems, the rate of change of speed, (acceleration) is proportional to the force applied. Double the mass and the force needs to be doubled for the same acceleration. Similarly for rotational systems, the angular acceleration of the load is proportional to the torque applied. Double the Moment of Inertia and the torque needs to be doubled for the same angular acceleration. Moment of Inertia is therefore a measure of a load's resistance to angular speed change; of how much effort (torque) is required to cause acceleration or deceleration.

Matching Motor To Load:

A common rule of thumb for SmartMotor™ sizing is that the load should have no more than 10 times the Moment of Inertia of the motor rotor that is driving it. This gives a good starting point and typically allows for safe sizing over a wide range of applications.

Since a rotating load wants to maintain the same velocity, then when a motor attempts to accelerated or decelerate the load, it must overcome the Moment of Inertia of that load by applying enough torque to accelerate it or decelerate it.

It takes more torque to change speed than it does to maintain a given speed.

In the same manner, for the motor to slow down a load, the load's Moment of Inertia will keep the motor going the same speed and will, in effect, back-drive the motor turning it into a generator.

In extreme cases, this can result in over-voltage damage to the Drive stage.

How to improve Moment of Inertia Ratio Between Motor and Load :

Adding gear reduction to a motor gives it more leverage to prevent back driving and also gives it a better advantage in accelerating a load up to speed.

For any given change in gear reduction, you get a proportional change in speed and static torque but you get a squared change in acceleration and dynamic rate of change of torque. The result is that by adding gear ratio you gain a squared decrease in the ratio of Moment of Inertia between motor and load.

Therefore the motor has a greater advantage in both accelerating and decelerating the load. It adds protection against damage to the system as a whole.

Lower System Cost

To give an idea of how much effect you get from additional gear reduction, take a look at the example below. This is an actual photo of the before-and-after drive system of a given application. The larger motor with low gear reduction and larger pulley was replaced by the smaller Animatics SmartMotor™ with much higher gear reduction and smaller pulley. The result was a smoother operating machine with higher resolution and better acceleration, increasing throughout and improving quality.

Optimize gear reduction to improve load dynamics and motor efficiency & reduce system cost

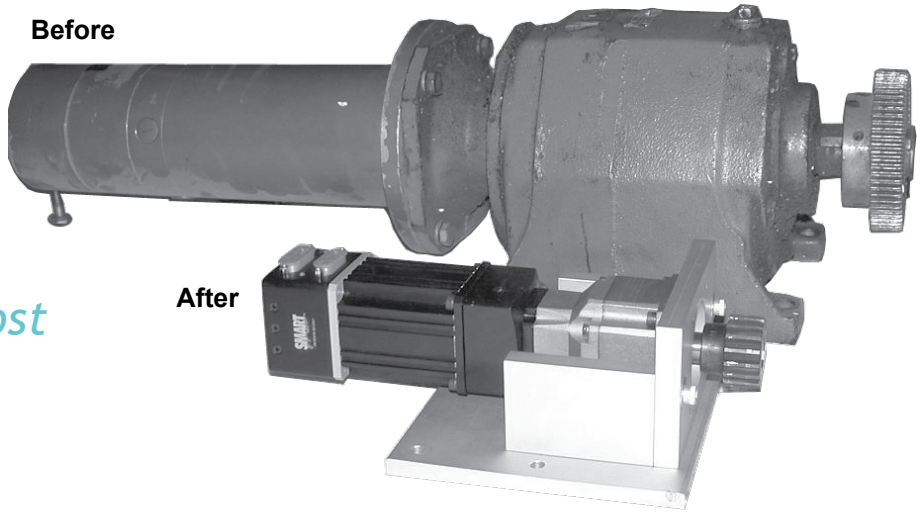

All units are precision ground planetary gear sets capable of sustained servo input speed. They can be ordered by themselves, or pre-mounted to the SmartMotors™ prior to shipment.

Each gearhead has a non-captive input pinion gear. This means the pinion is mounted onto the motor shaft and the gearhead is then mounted onto the motor flange.

Torque throughput on in-line (straight) gearheads are limited by input pinion diameters.

Typically the 7:1 ratio single-stage and 28:2 ratio two-stage gearheads have the higher torque ratings.

10:1 and 100:1 gearhead input pinions are very small and great care should be taken not to exceed maximum torque ratings for those gear ratios.

All right angle gearhead torque levels are limited by the right angle beveled gear sets. This is why all gear ratios show the same torque limits within that series.

All gearheads are limited to a maximum of 5000 RPM input pinion speed. This limit is due to differential speed across the input pinion bearings and lubrication flow. Exceeding 5000 RPM for any sustained amount of period will GREATLY decrease the life of the gearhead and will not be covered by warranty. However, for typical servo applications, there is no issue with reaching 5000RPM on each machine cycle peak speeds.

Please consult the factory for axial and radial load specifications. Load ratings are speed dependant and are charted across curves.

All specifications are subject to change without notice. Please consult the factory or website for latest data and CAD drawings.

Gearhead Series	Backlash (arc-minutes)	
	Single Stage	Two Stage
High Performance (S)	3	7
OEM Series (SP)	6	10
Right Angle (RAP)	7	11

Note: These are the low backlash values.

Animatics provides three series of gearheads.
The above chart is a quick reference to backlash specs.

Each gearhead is shipped with appropriate mounting hardware, fasteners, Allen key and pinion gap gauge.

2 Stage Gearheads Shown

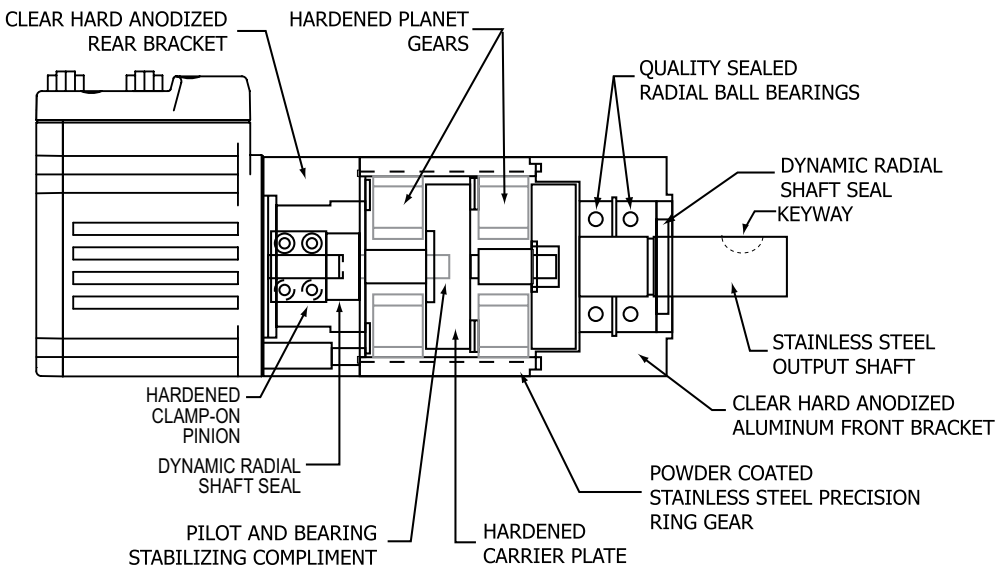

DIMENSION "L"
Single Stage = 2.869±.015
Double Stage = 3.738±.015

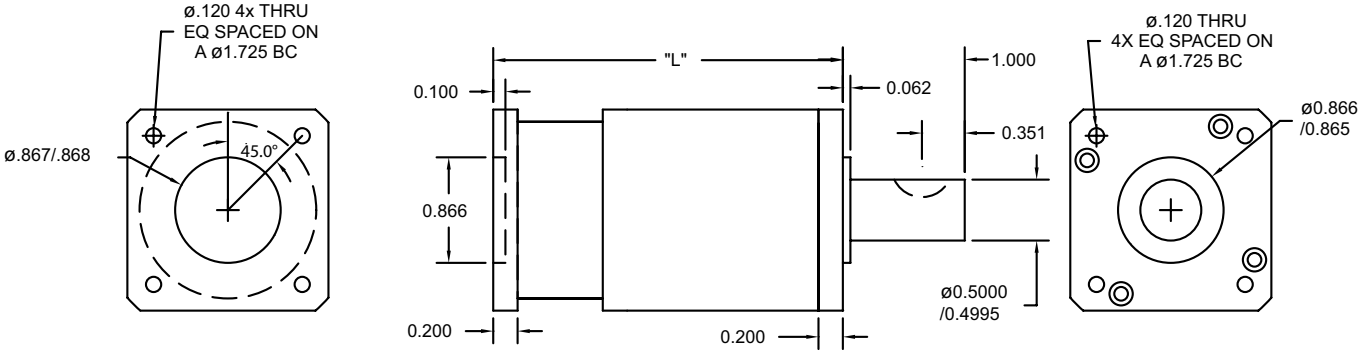

NOTE: Dimensions in Inches

Part #	Ratio	Continuous output torque at 1500 rpm input (in-lbs)	Continuous output torque at 3500 rpm input (in-lbs)	Continuous output torque at 5000 rpm input (in-lbs)	Gearhead intertia at input (lb-in-sec²)
Single Stage					
GH17P3	3:1	197	140	115	3.25×10^{-5}
GH17P4	4:1	177	136	116	1.60×10^{-5}
GH17P5.5	5.5:1	157	129	113	1.10×10^{-5}
GH17P7	7:1	143	122	110	9.56×10^{-6}
GH17P10	10:1	113	101	93	8.36×10^{-6}
Double Stage					
GH17P16	16:1	211	194	182	1.59×10^{-5}
GH17P22	22:1	216	201	193	1.10×10^{-6}
GH17P28	28:1	218	207	199	9.54×10^{-6}
GH17P40	40:1	220	212	207	8.35×10^{-6}
GH17P49	49:1	158	154	152	9.44×10^{-6}
GH17P55	55:1	183	177	175	8.31×10^{-6}
GH17P70	70:1	160	156	154	8.30×10^{-6}
GH17P100	100:1	122	120	119	8.29×10^{-6}

General Specifications

Construction Type	Ratio	Standard Backlash (arc-minutes)	Low Backlash (arc-minutes)	Efficiency	Weight (lbs)	Maximum Tested Input rpm
Single Stage	3:1 to 10:1	6	3	90%	1.14	5000
Double Stage	16:1 to 100:1	10	7	85%	1.62	5000

PEAK TORQUE: 15% above continuous rating. **NOTE**: Repeated peak torque loading may cause failure.

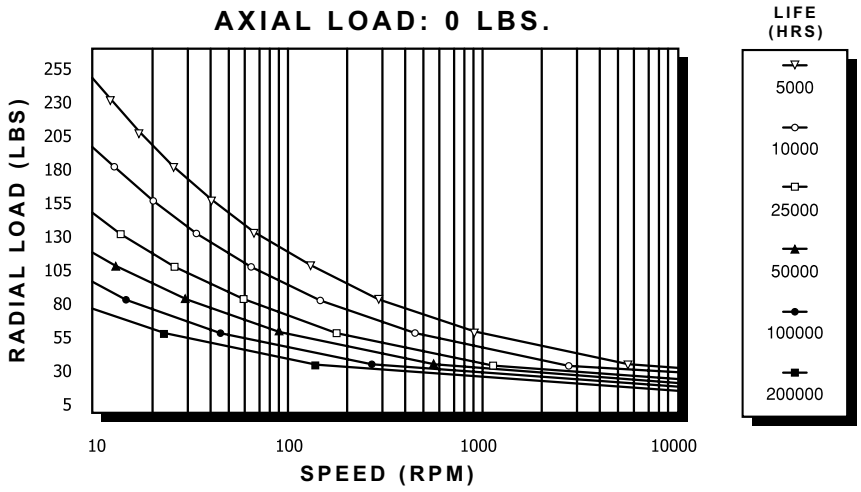

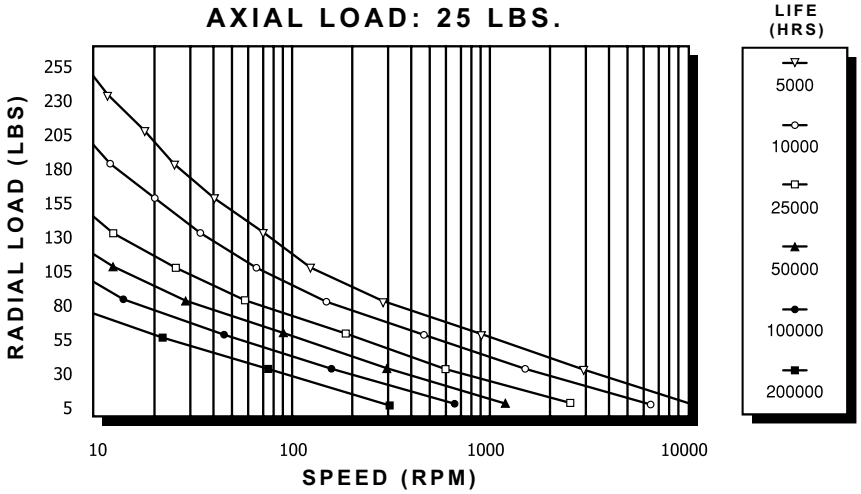

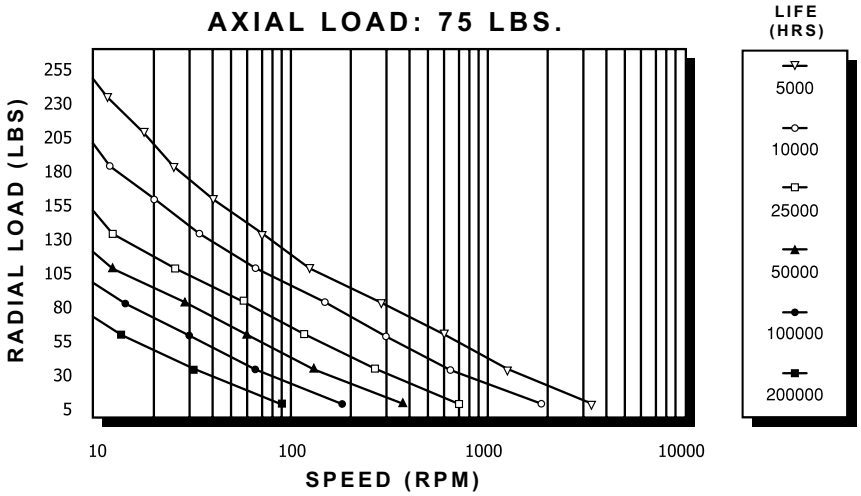

SPEED (RPM) refers to the gearheads output shaft speed.

LIFE (HRS) = (# of lifetime revolutions) ÷ (60 x rpm)

F_{RADIAL} is calculated at 1/2 the shaft length.

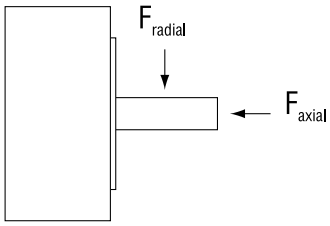

DIMENSION "L"
Single Stage (3:1 to 10:1) = 3.146± .015
Double Stage (16:1 to 100:1) = 4.249 ± .015

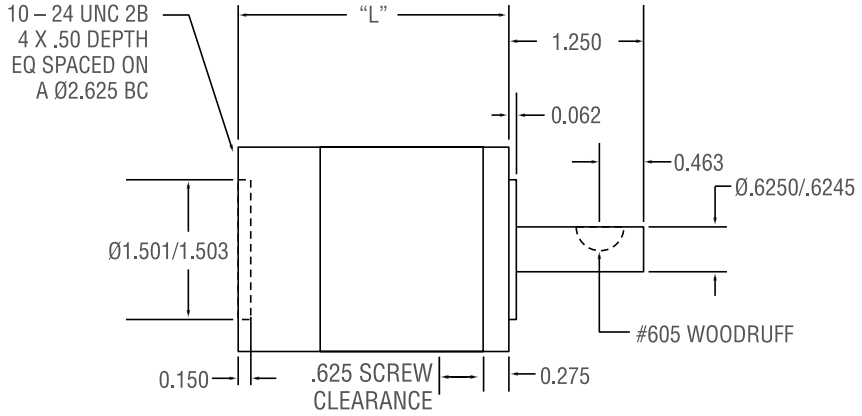

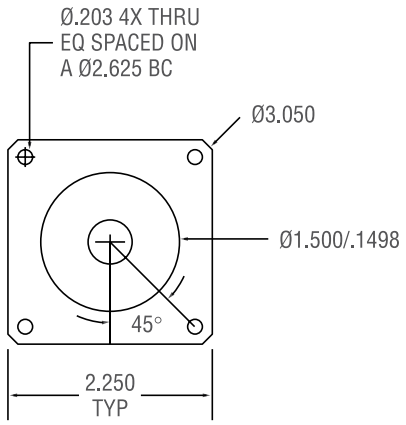

NOTE: Dimensions in inches

Part #	Ratio	Continuous output torque at 1500 rpm input (in-lbs)	Continuous output torque at 3500 rpm input (in-lbs)	Continuous output torque at 5000 rpm input (in-lbs)	Gearhead intertia at input (lb-in-sec^2)
Single Stage					
GH23P3	3:1	442	292	232	1.22×10^{-4}
GH23P4	4:1	410	294	242	5.24×10^{-5}
GH23P5.5	5.5:1	373	288	247	2.65×10^{-5}
GH23P7	7:1	344	279	245	1.93×10^{-5}
GH23P10	10:1	277	238	215	1.35×10^{-5}
Double Stage					
GH23P16	16:1	521	463	427	5.32×10^{-5}
GH23P22	22:1	536	490	460	2.70×10^{-5}
GH23P28	28:1	545	506	481	1.96×10^{-5}
GH23P40	40:1	553	525	506	1.36×10^{-5}
GH23P49	49:1	400	385	375	1.90×10^{-5}
GH23P55	55:1	460	443	432	1.34×10^{-5}
GH23P70	70:1	404	393	385	1.33×10^{-5}
GH23P100	100:1	308	303	298	1.33×10^{-5}

General Specifications

Construction Type	Ratio	Standard Backlash (arc-minutes)	Low Backlash (arc-minutes)	Efficiency	Weight (lbs)	Maximum Tested Input rpm
Single Stage	3:1 to 10:1	6	3	90%	2.29	5000
Double Stage	16:1 to 100:1	10	7	85%	3.42	5000

PEAK TORQUE: 15% above continuous rating. **NOTE:** Repeated peak torque loading may cause failure.

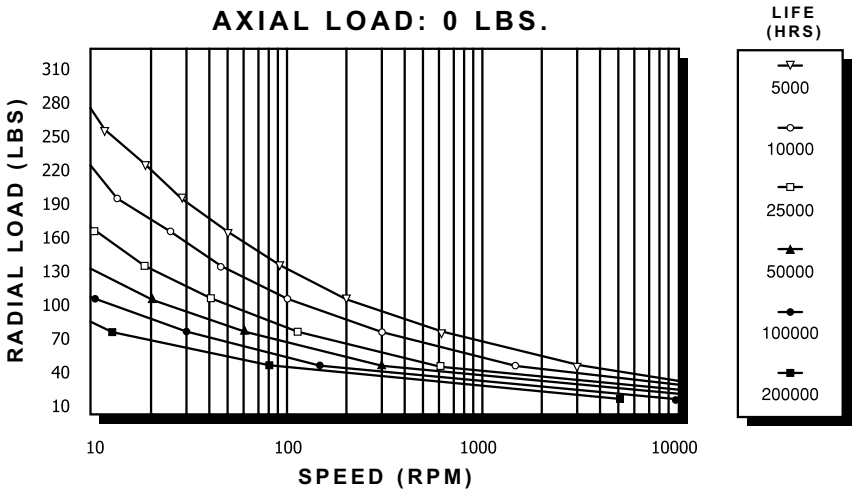

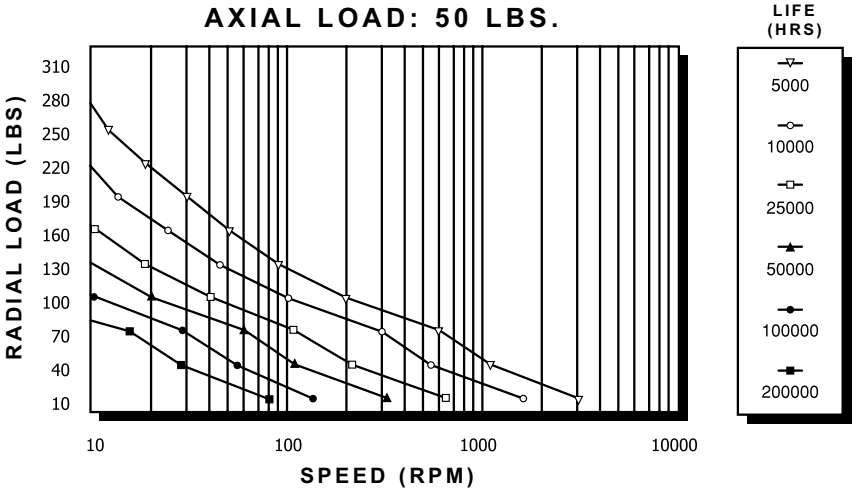

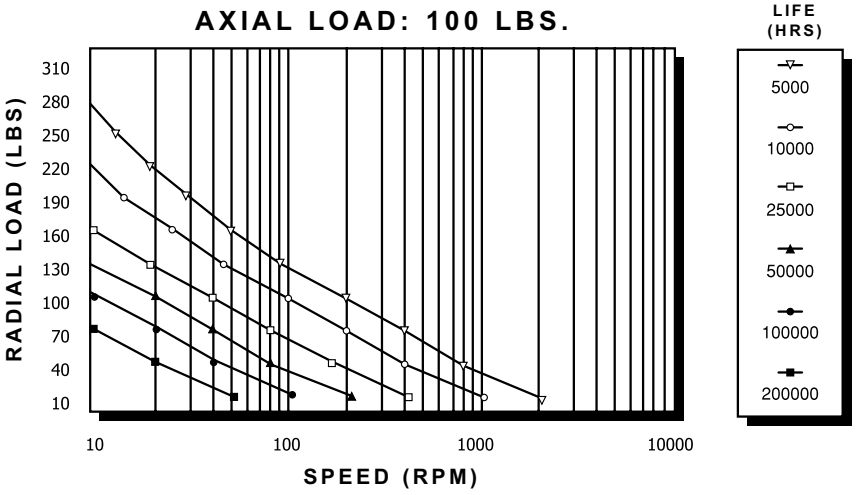

SPEED (RPM) refers to the gearheads output shaft speed.

LIFE (HRS) = (# of lifetime revolutions) ÷ (60 x rpm)

F_{RADIAL} is calculated at 1/2 the shaft length.

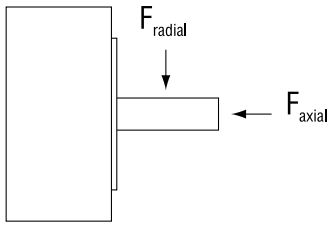

DIMENSION " L"
Single Stage (3:1 to 10:1) = 4.063± .015
Double Stage (16:1 to 100:1) = 5.431 ± .015

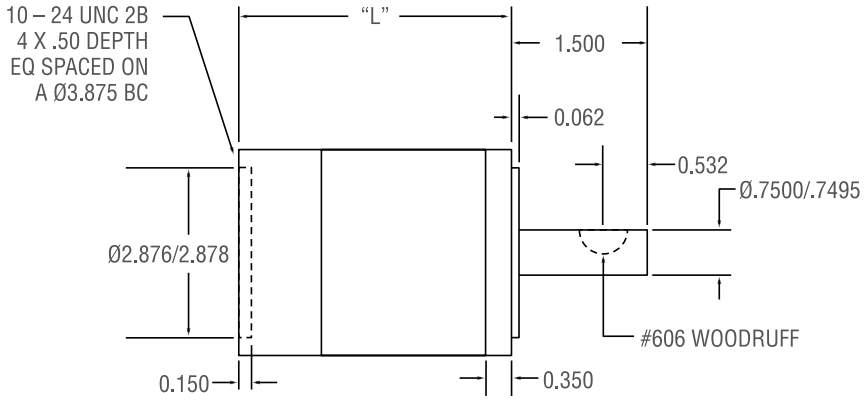

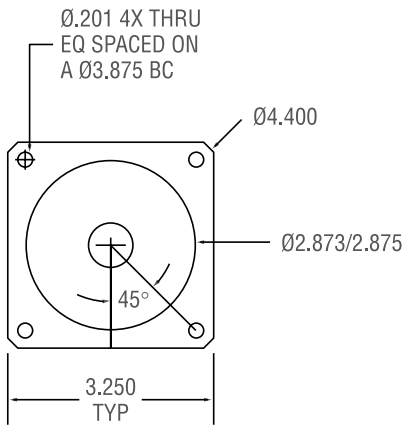

NOTE: Dimensions in inches

Part #	Ratio	Continuous output torque at 1500 rpm input (in-lbs)	Continuous output torque at 3500 rpm input (in-lbs)	Continuous output torque at 5000 rpm input (in-lbs)	Gearhead intertia at input (lb-in-sec^2)
Single Stage					
GH34P3	3:1	1010	615	475	6.77×10^{-4}
GH34P4	4:1	972	643	513	2.77×10^{-4}
GH34P5.5	5.5:1	913	657	543	1.51×10^{-4}
GH34P7	7:1	859	653	554	1.11×10^{-4}
GH34P10	10:1	707	575	505	7.90×10^{-5}
Double Stage					
GH34P16	16:1	1350	1145	1027	2.86×10^{-4}
GH34P22	22:1	1401	1234	1133	1.55×10^{-4}
GH34P28	28:1	1432	1293	1203	1.11×10^{-4}
GH34P40	40:1	1469	1362	1293	8.04×10^{-5}
GH34P49	49:1	1067	1010	971	1.11×10^{-4}
GH34P55	55:1	1228	1165	1123	7.94×10^{-5}
GH34P70	70:1	1081	1040	1010	7.90×10^{-5}
GH34P100	100:1	827	805	790	7.87×10^{-5}

⚠ WARNING - Please read when using with SM3416DT-PLS2 Series Motor:
All gearheads above come standard with 3/8 inch diameter input shaft. For Gearheads which require 0.5 inch shaft input, please add "-0.5" to part number. Example: GH34P3-0.5 will give you a half inch input shaft diameter.

General Specifications

Construction Type	Ratio	Standard Backlash (arc-minutes)	Low Backlash (arc-minutes)	Efficiency	Weight (lbs)	Maximum Tested Input rpm
Single Stage	3:1 to 10:1	6	3	90%	5.67	5000
Double Stage	16:1 to 100:1	10	7	85%	8.41	5000

PEAK TORQUE: 15% above continuous rating. **NOTE:** Repeated peak torque loading may cause failure.

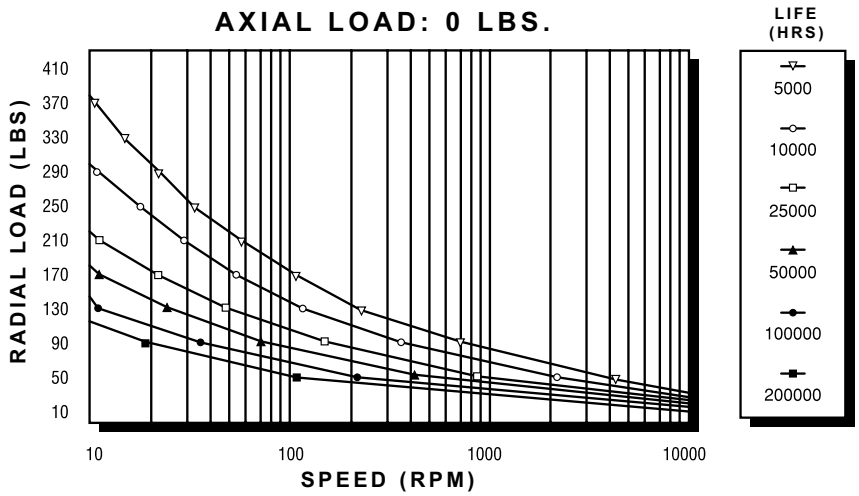

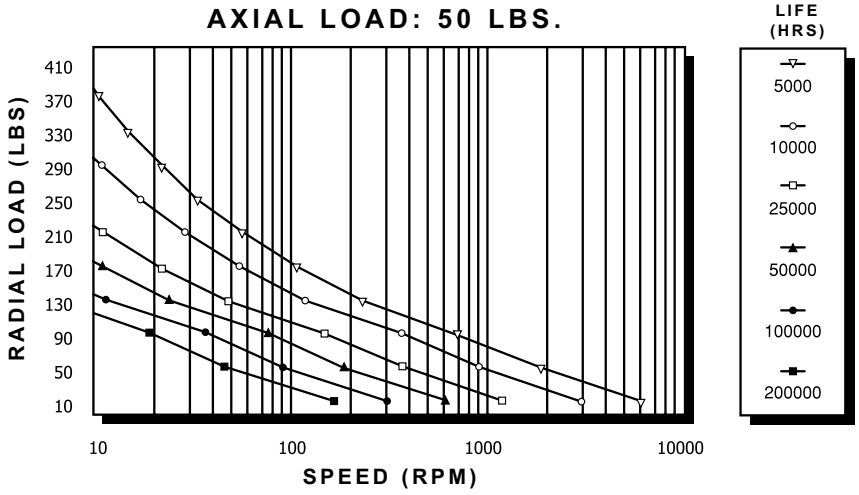

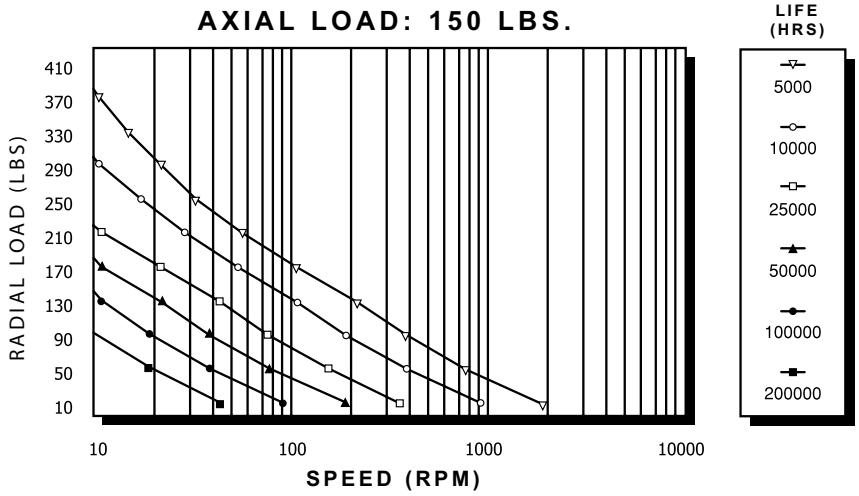

SPEED (RPM) refers to the gearheads output shaft speed.

LIFE (HRS) = (# of lifetime revolutions) ÷ (60 x rpm)

F_{RADIAL} is calculated at 1/2 the shaft length.

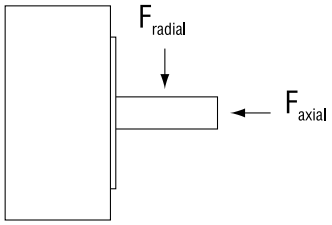

DIMENSION "L"
Single Stage (4:1 to 10:1) = 2.17± .015
Double Stage (16:1 to 100:1) = 2.78 ± .015

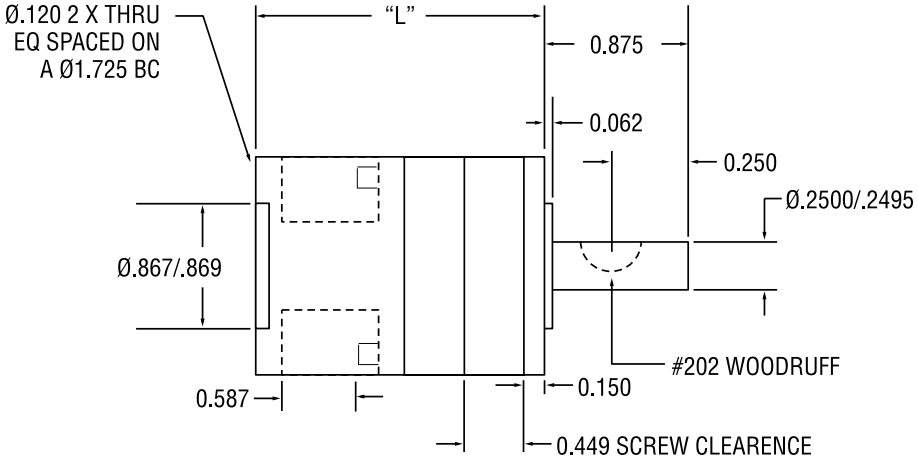

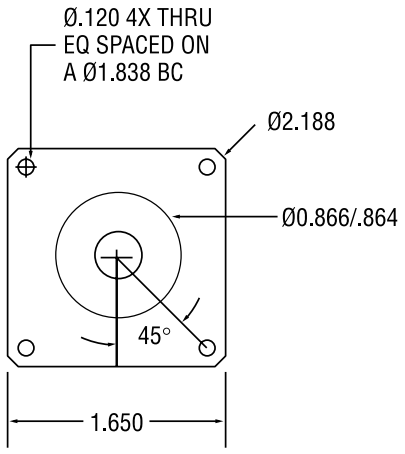

NOTE: Dimensions in inches

Part #	Ratio	Continuous output torque at 1500 rpm input (in-lbs)	Continuous output torque at 3500 rpm input (in-lbs)	Continuous output torque at 5000 rpm input (in-lbs)	Gearhead intertia at input (lb-in-sec²)
Single Stage					
GH17SP004	4:1	75	57	49	1.28×10^{-5}
GH17SP007	7:1	60	51	46	7.65×10^{-6}
GH17SP010	10:1	48	43	39	6.69×10^{-6}
Double Stage					
GH17SP016	16:1	81	74	70	1.27×10^{-5}
GH17SP028	28:1	83	79	76	7.63×10^{-6}
GH17SP049	49:1	61	59	58	7.55×10^{-6}
GH17SP070	70:1	61	60	59	6.64×10^{-6}
GH17SP100	100:1	47	46	46	6.63×10^{-6}

General Specifications

Construction Type	Ratio	Standard Backlash (arc-minutes)	Low Backlash (arc-minutes)	Efficiency	Weight (lbs)	Maximum Tested Input rpm
Single Stage	4:1 to 10:1	12	6	95%	0.59	5000
Double Stage	16:1 to 100:1	16	10	90%	0.88	5000

PEAK TORQUE: 15% above continuous rating. **NOTE:** Repeated peak torque loading may cause failure.

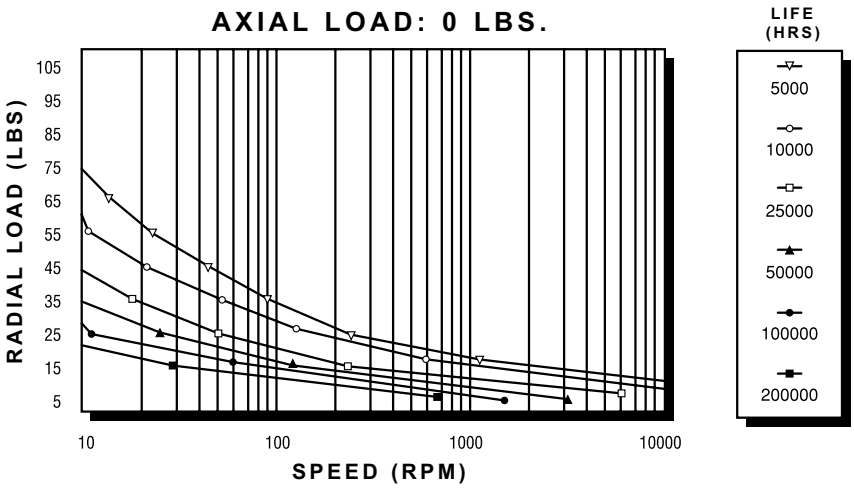

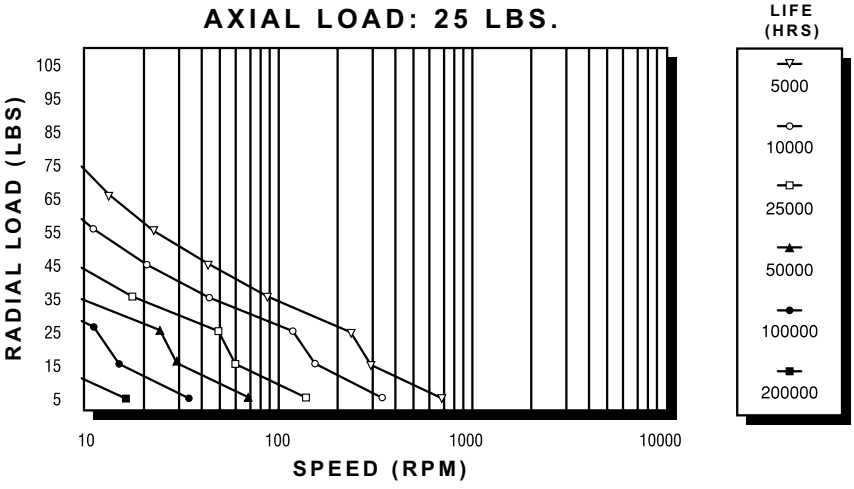

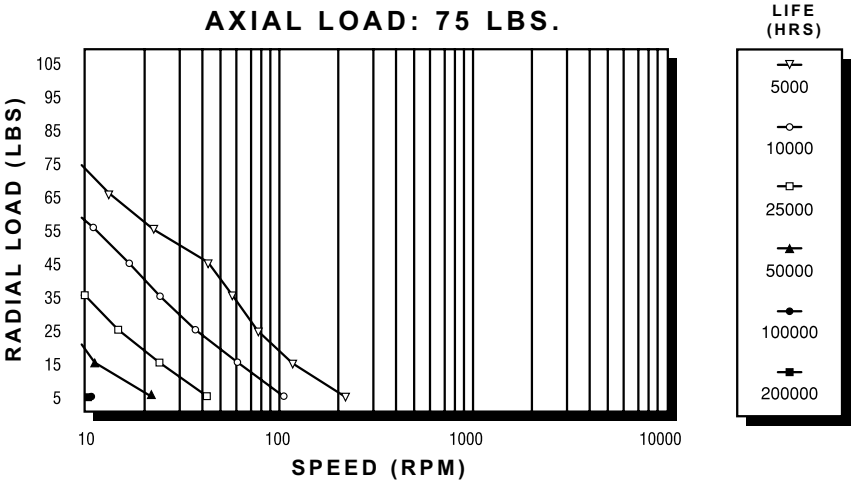

SPEED (RPM) refers to the gearheads output shaft speed.

LIFE (HRS) = (# of lifetime revolutions) ÷ (60 x rpm)

F_{RADIAL} is calculated at 1/2 the shaft length.

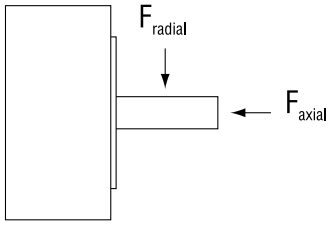

DIMENSION "L"
Single Stage (4:1 to 10:1) = 2.436± .015
Double Stage (16:1 to 100:1) = 3.029 ± .015

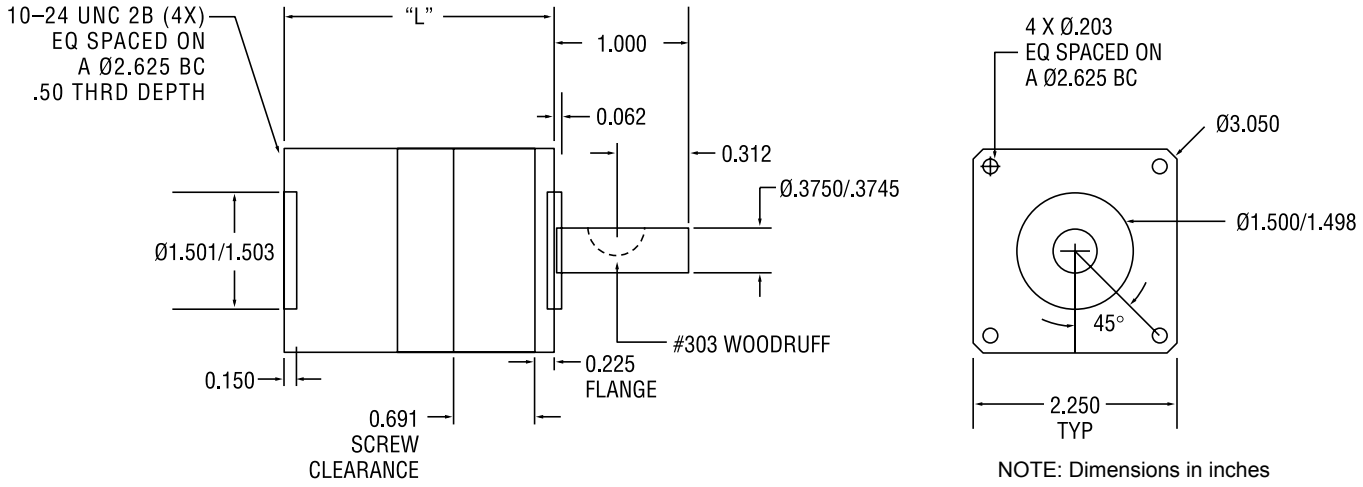

NOTE: Dimensions in inches

Part #	Ratio	Continuous output torque at 1500 rpm input (in-lbs)	Continuous output torque at 3500 rpm input (in-lbs)	Continuous output torque at 5000 rpm input (in-lbs)	Gearhead intertia at input (lb-in-sec^2)
Single Stage					
GH23SP004	4:1	185	133	109	4.19×10^{-5}
GH23SP007	7:1	155	126	110	1.54×10^{-5}
GH23SP010	10:1	125	107	97	1.08×10^{-5}
Double Stage					
GH23SP016	16:1	214	190	175	4.26×10^{-5}
GH23SP028	28:1	223	208	197	1.57×10^{-5}
GH23SP049	49:1	164	158	154	1.52×10^{-5}
GH23SP070	70:1	166	161	158	1.06×10^{-5}
GH23SP100	100:1	126	124	122	1.06×10^{-5}

General Specifications

Construction Type	Ratio	Standard Backlash (arc-minutes)	Low Backlash (arc-minutes)	Efficiency	Weight (lbs)	Maximum Tested Input rpm
Single Stage	4:1 to 10:1	12	6	95%	1.55	5000
Double Stage	16:1 to 100:1	16	10	90%	1.95	5000

PEAK TORQUE: 15% above continuous rating. **NOTE:** Repeated peak torque loading may cause failure.

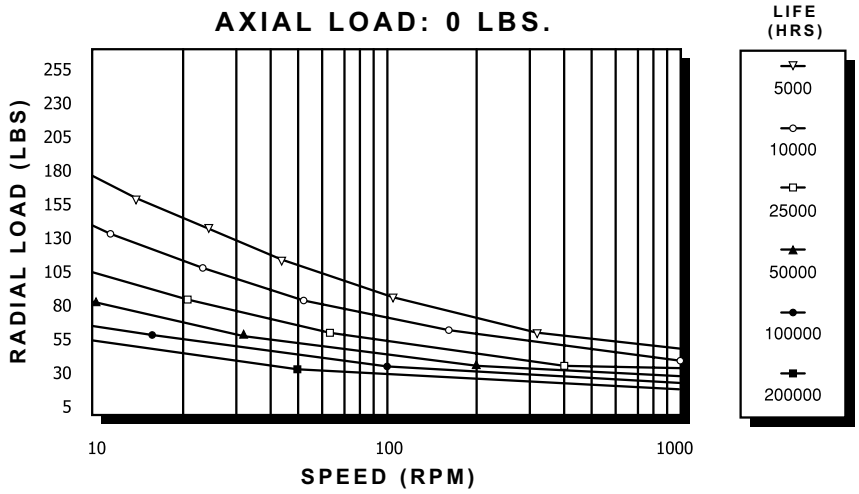

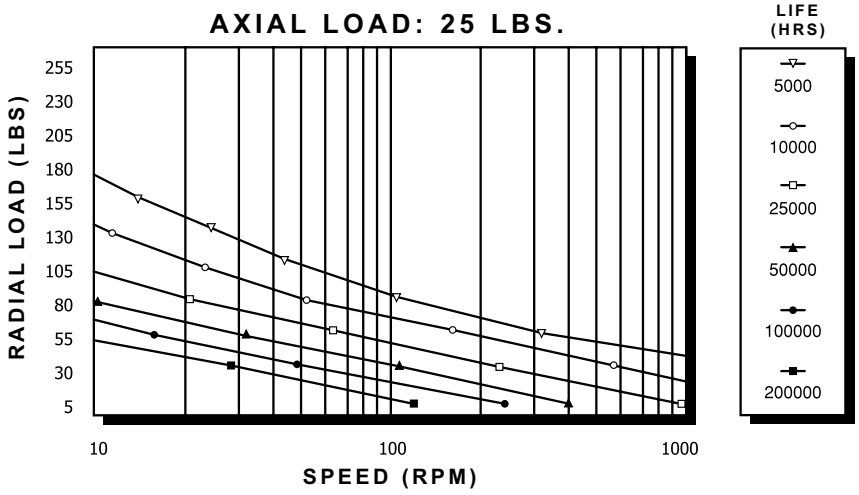

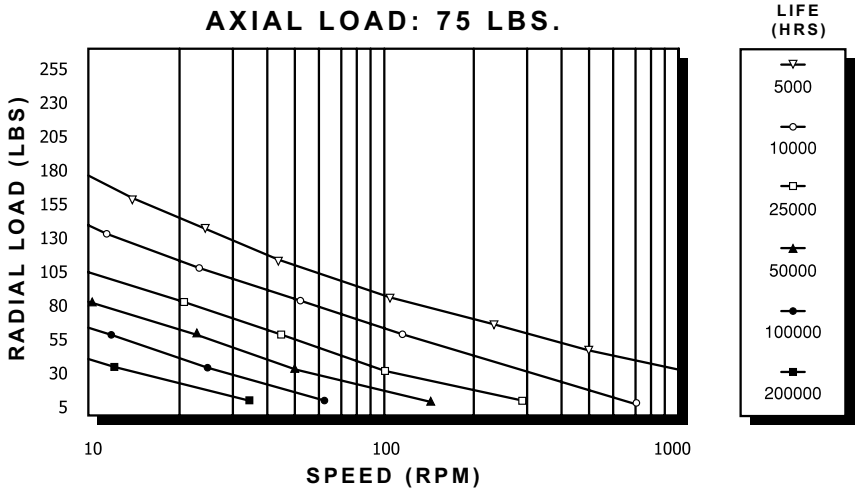

SPEED (RPM) refers to the gearheads output shaft speed.

LIFE (HRS) = (# of lifetime revolutions) ÷ (60 x rpm)

F_{RADIAL} is calculated at 1/2 the shaft length.

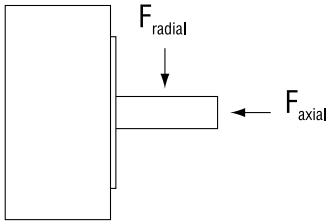

DIMENSION "L"
Single Stage (4:1 to 10:1) = 3.229± .015
Double Stage (16:1 to 100:1) = 4.087 ± .015

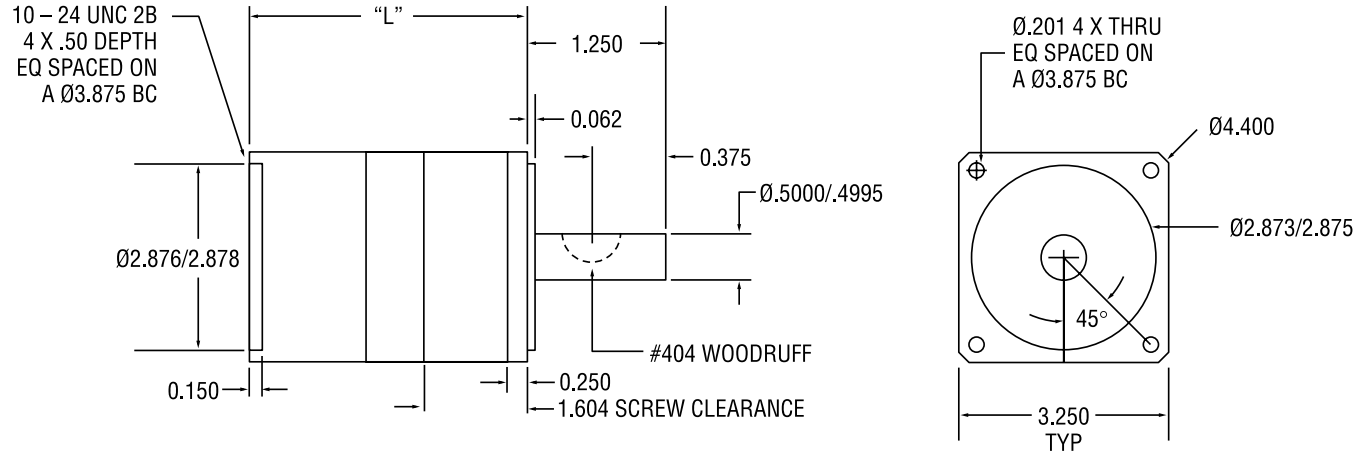

NOTE: Dimensions in inches

Part #	Ratio	Continuous output torque at 1500 rpm input (in-lbs)	Continuous output torque at 3500 rpm input (in-lbs)	Continuous output torque at 5000 rpm input (in-lbs)	Gearhead intertia at input (lb-in-sec^2)
Single Stage					
GH34SP004	4:1	529	350	279	1.28×10^{-4}
GH34SP007	7:1	467	355	301	7.65×10^{-5}
GH34SP010	10:1	384	313	275	6.69×10^{-5}
Double Stage					
GH34SP016	16:1	667	566	508	1.27×10^{-4}
GH34SP028	28:1	670	639	595	7.63×10^{-5}
GH34SP049	49:1	528	499	480	7.55×10^{-5}
GH34SP070	70:1	534	514	499	6.64×10^{-5}
GH34SP100	100:1	409	398	391	6.63×10^{-5}

⚠ WARNING - Please read when using with SM3416DT-PLS2 Series Motor:
All gearheads above come standard with 3/8 inch diameter input shaft. For gearheads which require 0.5 inch shaft input, please add "-0.5" to part number. Example: GH34SP004-0.5 will give you a half inch input shaft diameter.

General Specifications

Construction Type	Ratio	Standard Backlash (arc-minutes)	Low Backlash (arc-minutes)	Efficiency	Weight (lbs)	Maximum Tested Input rpm
Single Stage	4:1 to 10:1	12	6	95%	3.67	5000
Double Stage	16:1 to 100:1	16	10	90%	5.10	5000

PEAK TORQUE: 15% above continuous rating. **NOTE:** Repeated peak torque loading may cause failure.

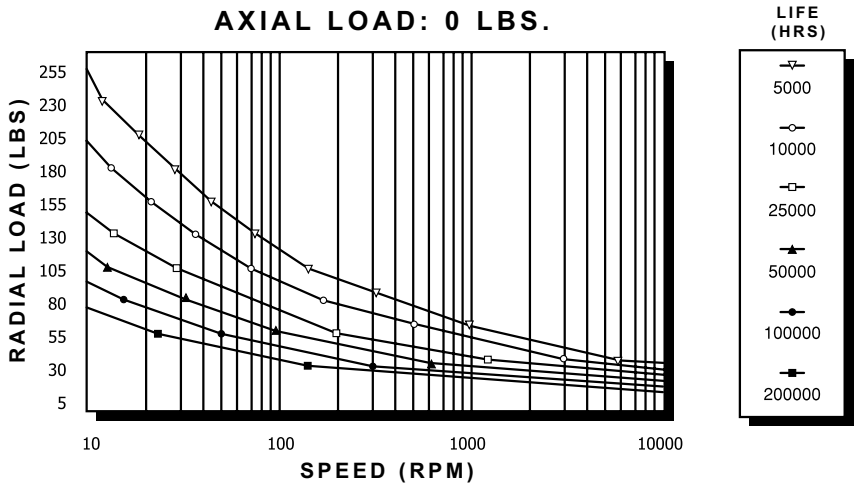

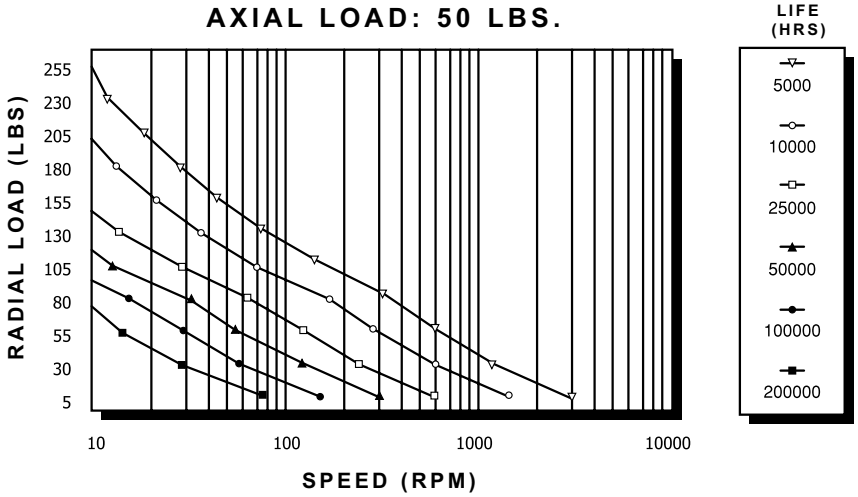

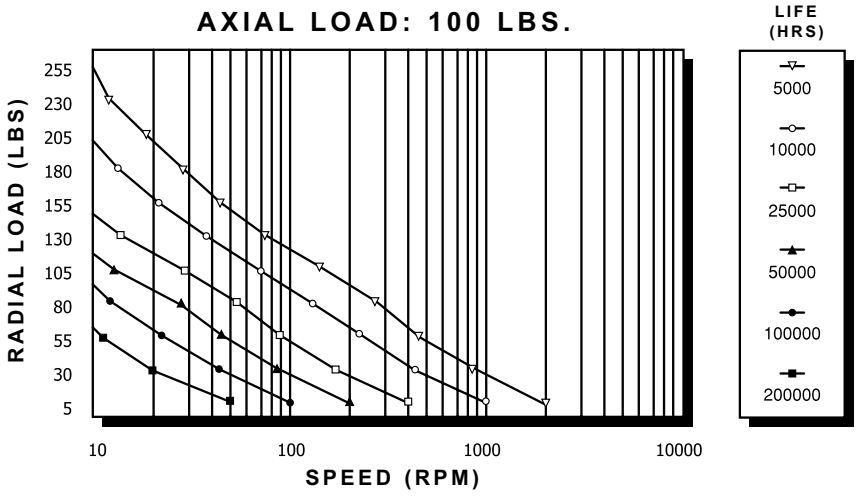

SPEED (RPM) refers to the gearheads output shaft speed.

LIFE (HRS) = (# of lifetime revolutions) ÷ (60 x rpm)

F_{RADIAL} is calculated at 1/2 the shaft length.

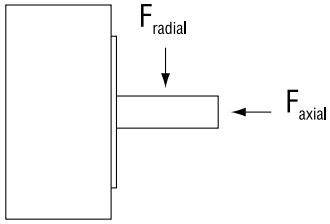

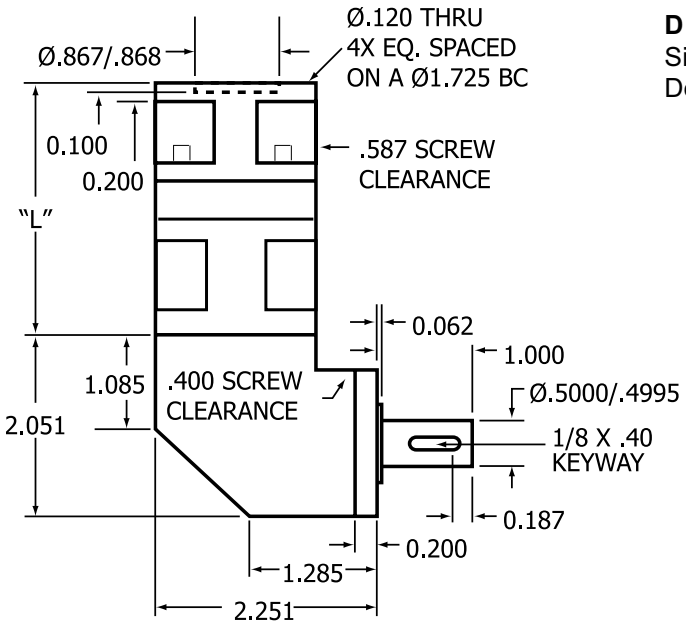

DIMENSION "L"
Single Stage (3:1 to 10:1) = 2.869 ± .015
Double Stage (16:1 to 100:1) = 3.738 ± .015

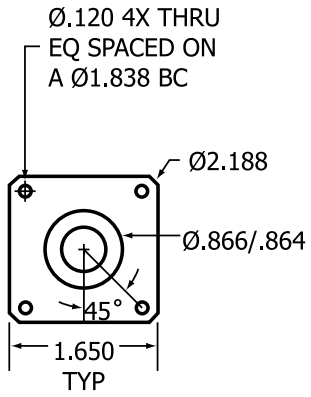

NOTE: Dimensions in inches

Part #	Ratio	Continuous output torque at 1500 rpm input (in-lbs)	Continuous output torque at 3500 rpm input (in-lbs)	Continuous output torque at 5000 rpm input (in-lbs)	Gearhead intertia at input (lb-in-sec^2)
Single Stage					
GH17RAP3	3:1	80	80	80	4.96×10^{-5}
GH17RAP5.5	5.5:1	80	80	80	1.61×10^{-5}
GH17RAP7	7:1	80	80	80	1.27×10^{-5}
GH17RAP10	10:1	80	80	80	9.90×10^{-6}
Double Stage					
GH17RAP16	16:1	100	100	100	1.65×10^{-5}
GH17RAP22	22:1	100	100	100	1.13×10^{-5}
GH17RAP55	55:1	100	100	100	8.36×10^{-6}
GH17RAP100	100:1	100	100	100	8.31×10^{-6}

Construction Type	Ratio	Standard Backlash (arc-minutes)	Low Backlash (arc-minutes)	Efficiency	Weight (lbs)	Maximum Tested Input rpm
Single Stage	3:1 to 10:1	10	7	90%	1.96	5000
Double Stage	16:1 to 100:1	14	11	85%	2.44	5000

PEAK TORQUE: 15% above continuous rating. **NOTE:** Repeated peak torque loading may cause failure.

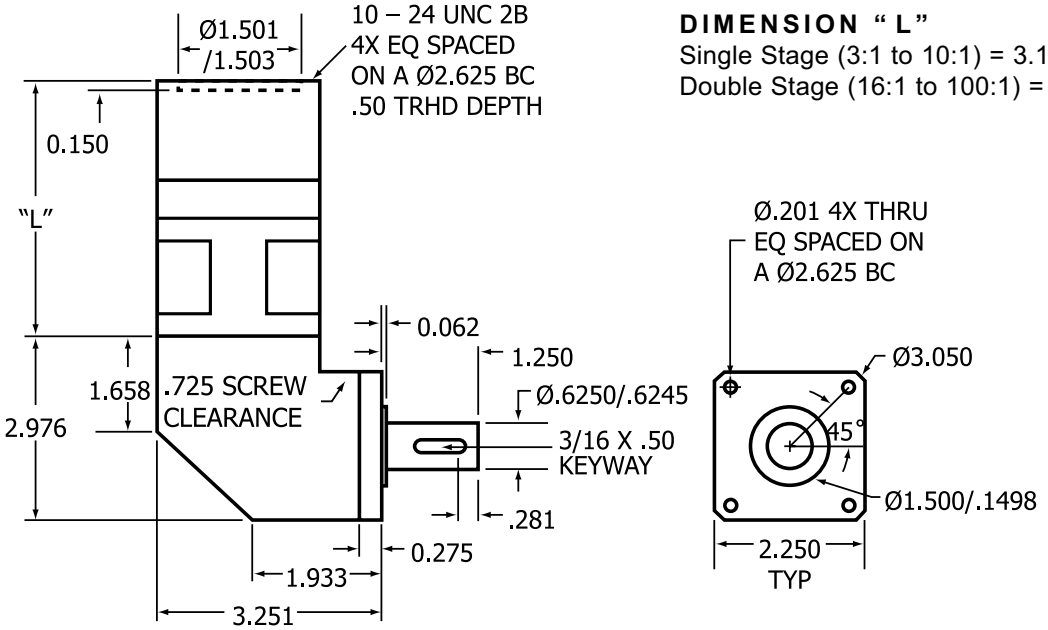

DIMENSION "L"
Single Stage (3:1 to 10:1) = 3.146 ± .015
Double Stage (16:1 to 100:1) = 4.249 ± .015

Part #	Ratio	Continuous output torque at 1500 rpm input (in-lbs)	Continuous output torque at 3500 rpm input (in-lbs)	Continuous output torque at 5000 rpm input (in-lbs)	Gearhead intertia at input (lb-in-sec^2)
Single Stage					
GH23RAP3	3:1	280	280	232	2.94×10^{-4}
GH23RAP5.5	5.5:1	280	280	247	7.77×10^{-5}
GH23RAP10	10:1	277	238	215	2.90×10^{-5}
Double Stage					
GH23RAP16	16:1	350	350	350	5.93×10^{-5}
GH23RAP22	22:1	350	350	350	3.02×10^{-5}
GH23RAP55	55:1	350	350	350	1.39×10^{-5}
GH23RAP100	100:1	308	303	298	1.35×10^{-5}

Construction Type	Ratio	Standard Backlash (arc-minutes)	Low Backlash (arc-minutes)	Efficiency	Weight (lbs)	Maximum Tested Input rpm
Single Stage	3:1 to 10:1	10	7	90%	4.87	5000
Double Stage	16:1 to 100:1	14	11	85%	6.00	5000

PEAK TORQUE: 15% above continuous rating. **NOTE:** Repeated peak torque loading may cause failure.

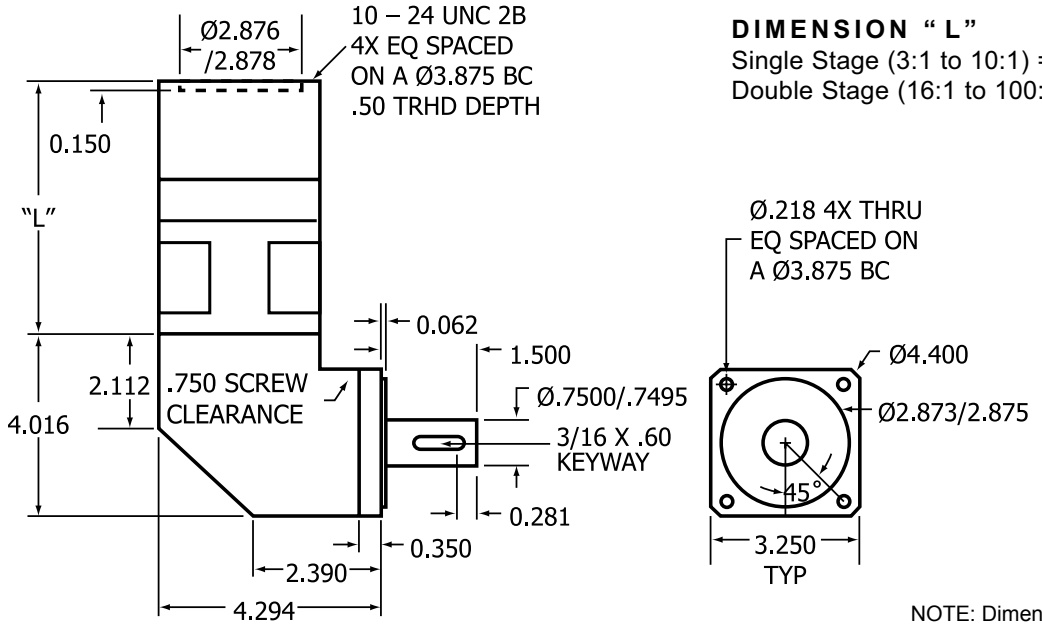

DIMENSION "L"
Single Stage (3:1 to 10:1) = 4.063 ± .015
Double Stage (16:1 to 100:1) = 5.431 ± .015

NOTE: Dimensions in inches

Part #	Ratio	Continuous output torque at 1500 rpm input (in-lbs)	Continuous output torque at 3500 rpm input (in-lbs)	Continuous output torque at 5000 rpm input (in-lbs)	Gearhead intertia at input (lb-in-sec^2)
Single Stage					
GH34RAP3	3:1	525	525	475	1.20×10^{-3}
GH34RAP5.5	5.5:1	525	525	525	3.08×10^{-4}
GH34RAP10	10:1	525	525	505	1.26×10^{-4}
Double Stage					
GH34RAP16	16:1	656	656	656	3.05×10^{-4}
GH34RAP22	22:1	656	656	656	1.65×10^{-4}
GH34RAP55	55:1	656	656	656	8.10×10^{-5}
GH34RAP100	100:1	656	656	656	7.92×10^{-5}

⚠ WARNING - Please read when using with SM3416DT-PLS2 Series Motor:
All gearheads above come standard with 3/8 inch diameter input shaft. For gearheads which require 0.5 inch shaft input, please add "-0.5" to part number. Example: GH34RAP3-0.5 will give you a half inch input shaft diameter.

Construction Type	Ratio	Standard Backlash (arc-minutes)	Low Backlash (arc-minutes)	Efficiency	Weight (lbs)	Maximum Tested Input rpm
Single Stage	3:1 to 10:1	10	7	90%	11.89	5000
Double Stage	16:1 to 100:1	14	11	85%	14.62	5000

PEAK TORQUE: 15% above continuous rating. **NOTE:** Repeated peak torque loading may cause failure.

Introduction to Software

Animatics Corporation provides the following software packages free of charge for interfacing with SmartMotors™.

- SMI™: SmartMotor Interface for developing downloadable programs for the SmartMotor controllers
- SSI™: Smart Select Interface: A configuration tool for point-and-click programming
- SMI Engine™: A DLL tool kit for VB, C++ and advanced programming in the Windows environment

Most users will require SMI at a minimum in order to interface with and to program SmartMotors.

For those wishing to control the SmartMotors via PLC hardware I/O handshaking, it is recommended to use the SSI (Smart-Select-Interface) software. This package allows for 16-funciton preset point-and-click programming ideal for I/O control of preset position or velocity moves as well as torque limited moves and more.

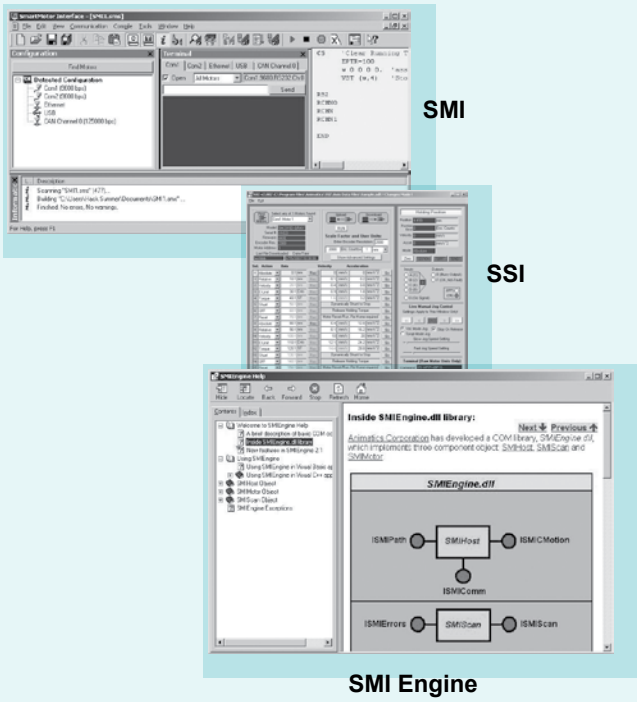

Animatics is proud to offer one of the most cost competitive multi-axis control solutions for coordinated motion on the market. With a simple daisy chain power and communications cable, two or more SmartMotors and one of the following applications, a system can be built up and replicated in record time providing the least expensive replication cost of any CNC system available.

The following CNC packages are turnkey, field ready applications for the Windows Operating System. These come at a competitive and cost effective price providing full multi-axis contouring mode

- SMNC™: CNC G-code compatible software package up to 6 axis
- JenCNC™: CNC G-Code compatible up to 5 axis, full live graphical feedback on screen

Both packages are true CNC software packages in that they will convert standard GE-Fanuc compatible G-code files into motion on the machine.

Note: each package does have the ability to import 2-dimensional DXF files, but they are not intended to replace full blown CAD/CAM packages. It is highly recommended to seek out proper software for converting SolidWorks or other solid model files to G-code. Most of the popular CAD/CAM packages produce G-code files that work seamlessly with SMNC and / or JenCNC with little or no edits required short of feed rate and end of code tweaks to the files.

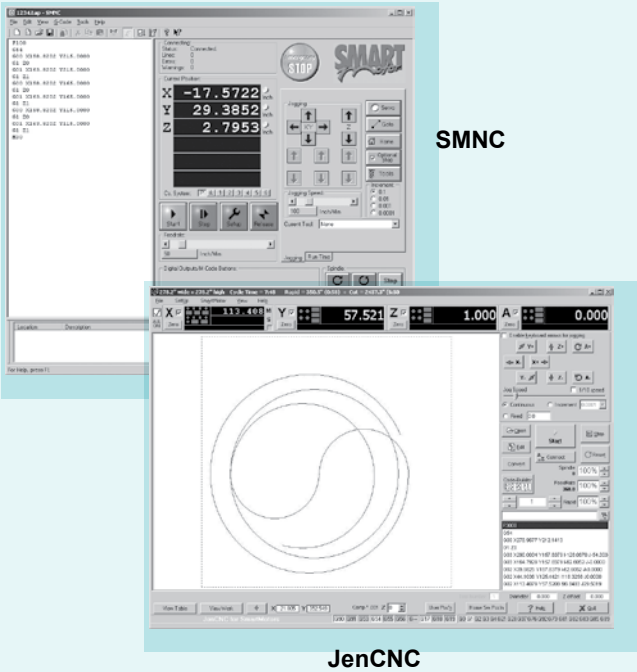

SMI
SMARTMOTOR INTERFACE
Free Download from Website

Animatics' SMI™ software provides an easy-to-use Microsoft Windows compatible interface to your Animatics SmartMotor™. Using SMI, you can define multi-axis motion control for 1 to 100 SmartMotors. SMI includes a terminal program, program editor, and source level debugger. Standard SMI features include a Tools menu to set PID tuning parameters and plot the step response, motor info and dynamic status tracking, and online help and documentation. The latest release of SMI can open multiple windows for program editing, instantly address multiple motors, and upload programs from motors. Simply write and download your application to the configured SmartMotor and reboot the motor to start your application working.

Download SMI at no cost from the Animatics web site (www.animatics.com) or from the product CD-ROM, and use the installation wizard to install SMI, SMIEngine™, and Coordinated Motion.

Features in SMI

The latest release of SMI adds extensive user interface improvements, functional enhancements, and new utilities that help you develop, test, run, and deploy your Animatics SmartMotor applications.

Projects Feature. Do you need to put an SMI project on hold? You can save your communications, configuration, and preferences settings with the new Project option. The Project menu option allows you to manage and save your workspace settings and applications configuration settings.

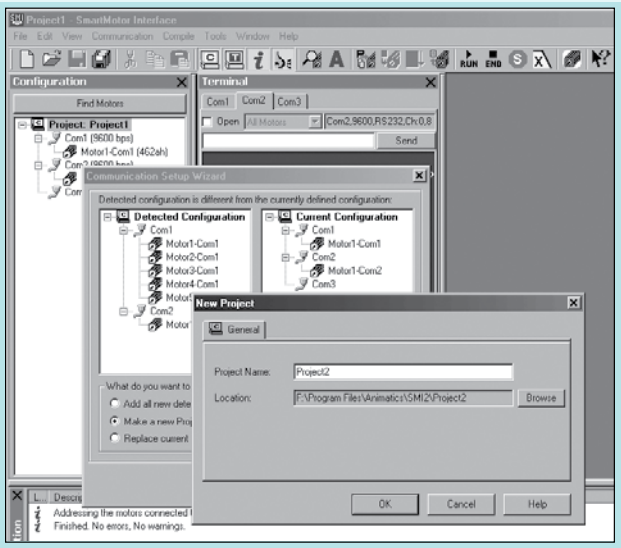

Communications with Ethernet, CANopen, RS-232 and RS-485 SmartMotors

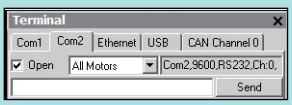

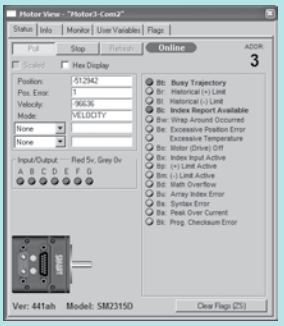

The Polling Window Interface has special user-defined polling features to help you monitor important functions conveniently. Monitor different status bits, variables, and I/O from any motor in a chain, even during application execution.

The **Information window** displays error and information messages and allows you to go directly to the message's source location.

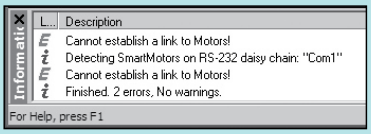


```
UCI       'set port C as input
V=100000  'set speed
A=100     'set accel
MV        'set to velocity mode
G
WHILE Bt
    IF Bo
        BREAK
    ENDIF
LOOP

END
```

Editor Window Uses different colors for different code elements, such as keywords or comments

The **Terminal** window creates a tabbed page for each port so you can communicate with individual or multiple SmartMotors.

The **Serial Data Analyzer** displays data transfers between your computer and Animatics SmartMotor™. You can filter the data to display only the information you want; for example, choose to display transmitted data, received data, or echoed data.

The **Chart View** is a collection of user-defined motor parameters (Chart Items) that you can select to monitor during motor operation in a dynamic graphical display.

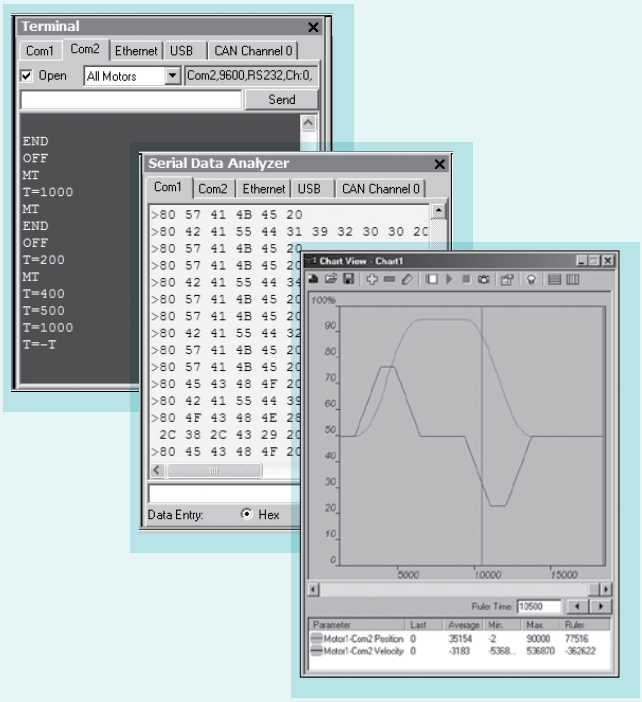

SmartMotor Playground. Would you like to be able to see and modify your motion control settings on-the-fly? With SMI you can. The Playground automatically detects connected motors and gathers data in the Motor Info tab. In the SMI Playground you can modify Torque, Velocity, and Position settings in real-time.Using numerical values for input or the interactive interface with drag and drop, sliders, and radio buttons, you can see the results immediately.

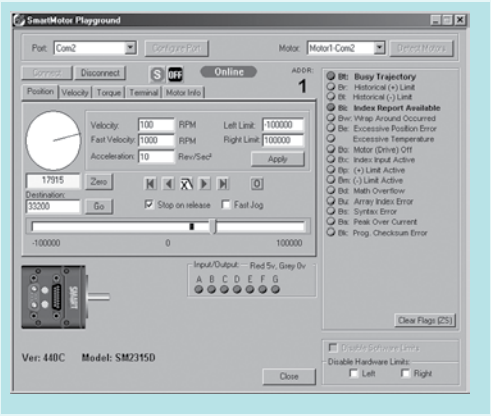

Smart Select INTERFACE™

Free Download from Website

Animatics Smart Select Interface is a Point-And-Click Approach to programming Animatics SmartMotors™.

This interface is a configuration tool allowing the user to program the motor for pre-set motion profiles such as:

- Absolute Position Moves
- Relative Position Moves
- Constant Velocity Move
- Reduce Torque Limited Velocity Moves
- Open Loop Torque Mode
- Dynamic Braking

In this simple approach, the user can predefine all moves and then simply connect the I/O to a PLC and allow the PLC to trigger motion as needed.

I/O is assigned as follows:

Ports A, B, C, and D:	4-bit binary 1-of-16 selection
Port G:	“GO” input
Port E:	“Busy Moving” Output
Port F:	“Fault” Output

The user can set scale factors and choose units in

- inches
- millimeters
- microns
- degrees
- revolutions

There are several built-in Home routine methods as well as manual homing. A graphical representation aids the user in Home Method Selection.

On-line diagnostics section includes:

- Manual Jogging
- Direct Terminal Window
- I/O Status
- Direct Drive and Control Command Buttons

Tuning made simple with the “Easy Tune Slider”

Simple slide-action Servo tuning to take the hassle out of guesswork.

All data is saved to both the motor and hard drive. Multiple “axis data files” can be saved, edited and recalled for later transfer to other SmartMotors.

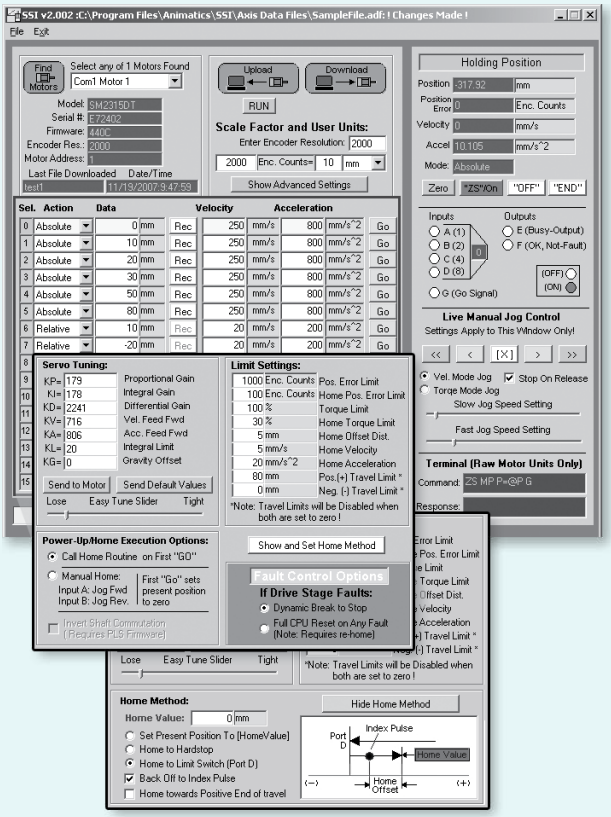

The SmartBoxBCD™ is a compliment to the SSI software. It is designed to emulate I/O hand shaking from a PLC as would be used with the SSI Software.

See page: 83 for more details.

SMIEngine

Free Download from Website

Animatics' SMIEngine™ is a source code module library created as a software tool for the Windows Operating System environment. It comes free with the installation of the SMI software.

The installation includes source code examples written in:

Borland C++, Microsoft C++, Visual C, VB and VBA (Excel).

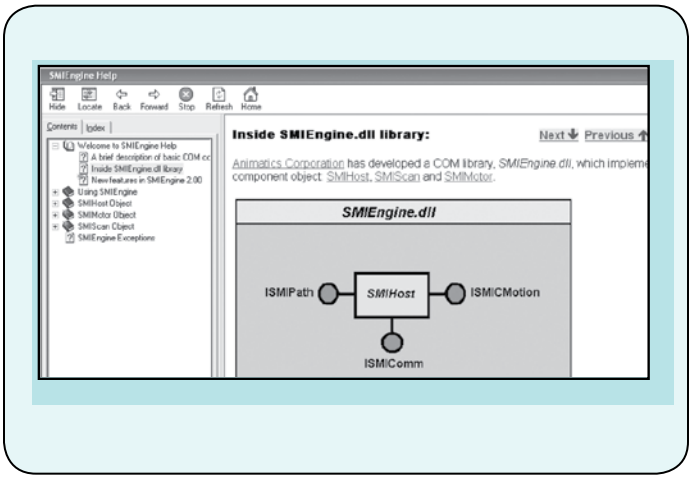

SMIEngine is based on the Windows Component Object Model (COM) and works with:

- Microsoft C++
- Borland C++
- Microsoft Visual Basic (VB)
- VBA (Visual Basic for Applications)
- MS.Net environment
- Borland Delphi
- Pascal
- Python
- LabView (when installed as an Active-X component)

Note about Windows Vista: With the release of Microsoft Vista, the name of the dll file changes from SMEengine.dll to IntegMotorInterface.dll. Other than the name change, all internal definitions have remained the same and are fully backwards compatible to existing applications with no need to change the body of the source code.

Using SMIEngine, you can perform the following tasks:

- Configure PC serial ports
- Address Animatics SmartMotors™ through selected serial ports
- Send commands to the motors and receive motor responses that allow you to:
  - Control and change modes of operation
  - Update or change motion parameters and variables
  - Gather real-time data from motors for online diagnostics
  - Control the motors using Coordinated Motion (Contouring or Host Mode)
  - Create circular and linear path coordinates used for Coordinated Motion
- Work with downloadable SmartMotor code to:
  - Scan user program source files (.sms) for errors
  - Create an executable SmartMotor compiled user program file (.smx)
  - Download and upload compiled user programs to and from motors
  - Create a list of errors in a user program and provide an interface for navigating through errors

Optimizing the SMIEngine for Multi-Axis coordinated Motion Control:

Multiple Instances of the SMIEngine can be run at the same time for each communications port that is open. In doing so, the application can maximize usage of communications bandwidth to each motor or each set of motors. Highly effective and efficient applications can be created to control CNC machines via a PC.

Example Application using SMIEngine:

The Animatics JenCNC software package was created in Borland C++ using the SMIEngine exclusively to handle all Motor communications. The result was a stable and proven CNC platform for controlling up to 4 axis machines via a standard RS-232 serial port.

SMNC
smartmotor numeric control

SMNC™, Animatics' G-Code based servo motion control software, uses numeric control to deliver multi-axis contouring for your Animatics SmartMotor™ applications. SMNC provides a set of features that are comparable to any CNC system, including a user interface that is similar in appearance to a traditional CNC system. Review the table in this section to see the G and M Codes that are supported by SMNC software.

SMNC Communicates with SmartMotors via RS-232, RS-485, and CANopen.

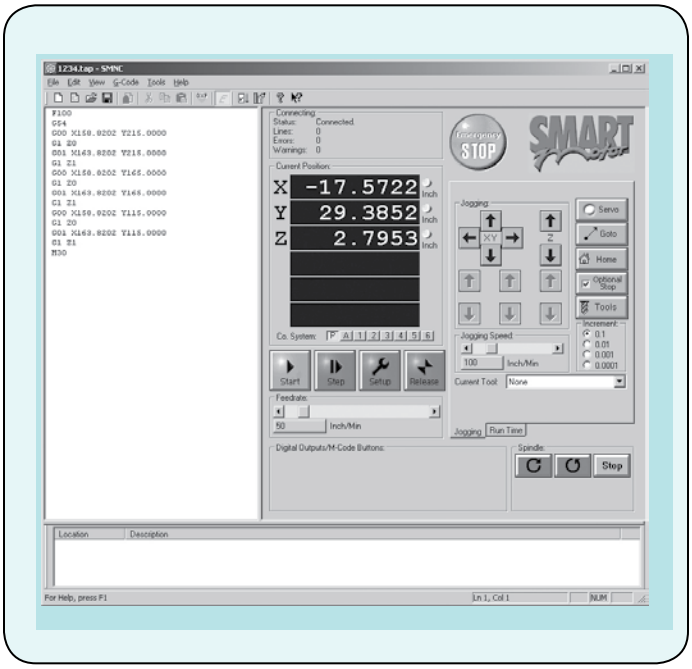

SMNC standard features include:

- Linear and circular motion control of multiple axes
- Configures SmartMotors across multiple serial ports
- Converts CAD-DXF files into motion control G and M Codes
- Duplication of axis motion for gantry systems
- Smooth control of acceleration and deceleration for sensitive curvilinear motion
- Large numerical display
- 6 axis control, includes axis Mimic and Spindle
- User-definable M-Codes for digital output
- Displays source code during execution
- Writes and edits any G-Code program in the source view, with added support for:
- 3D linear movements
- CW and CCW Circular movements
- CW and CCW Helical Movements
- Wait, Pause, definable M-Codes, Spindle Commands and more
- Defines up to 40 M-Code commands and views their status during execution
- Imports graphic files with DXF format and converts them to G-Code programs
- Exports G-Code programs to Coordinated Motion Files
- Checks and runs a G-Code program or Coordinated Motion file
- Checks features during G-Code program execution:
- Feed Hold
- Single step
- Reset (End)
- Emergency stop
- Jogs the device using the Jog Buttons, and moves it to any location using the Go To utility on the Panel view
- Controls the Spindle using related buttons on the Panel View. The Spindle can be a SmartMotor or any other type of motor controlled by M-Codes and digital outputs
- Sets any connected SmartMotor in Coordinated Motion Mode, Spindle Mode, Mimic Mode, Rotary/Vector Mode, or Uncoordinated Mode

SMNC™ provides full user control over standard motion parameters and table (work area) dimensions. Additional control includes the ability to custom tailor how motion responds though tight corners and small arcs and circles allowing for smooth transition through the entire path.

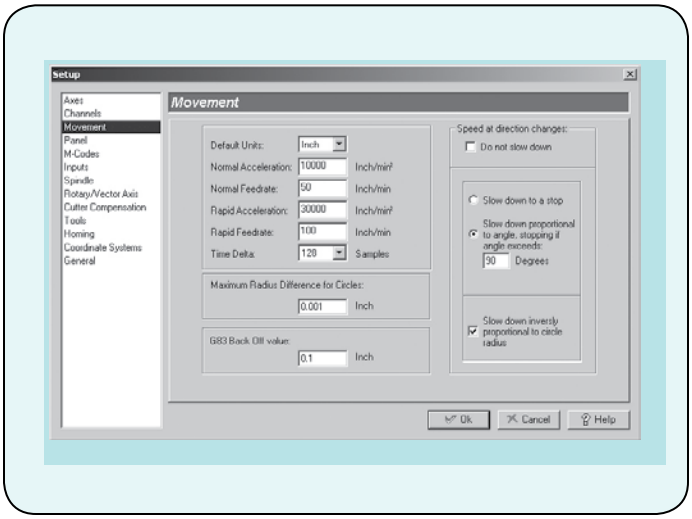

Cutter compensation has options to either ignore holes, skip holes or enter holes as shown below. Additional parameters allow for automatics Z axis control through the holes and the ability to warn the end user when regions are adversely affected.

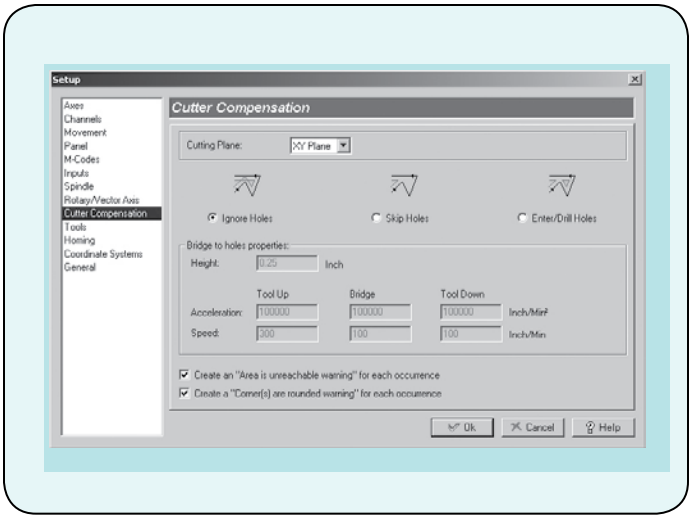

New features:

- Define up to 30 Inputs to perform SMNC functions, such as Start, Reset, and Feed Hold, or as interlocks.
- Define up to 10 different tools. The current tool can be changed in a G-Code program.
- Password protection to control user access for many features.
- Define up to 7 different coordinate systems (G56-G59, G154)
- Customizable homing methods.

G and M codes supported by SMNC

Codes	Description
G0	Rapid Linear movement
G1	Normal Linear movement
G2	Clockwise circular movement
G3	Counterclockwise circular movement
G4	Wait
G17	Select the X-Y plane for circular movements
G18	Select the X-Z plane for circular movements
G19	Select the Y-Z plane for circular movements
G20	Change units to inch
G21	Change units to Millimeter
G28	Return to the 1st Reference point
G30	Return to the 2nd Reference point
G40	Cancel cutter compensation
G41	Start cutter compensation left
G42	Start cutter compensation right
G43	Start tool length compensation
G49	Cancel tool length compensation
G54	Use preset coordinate system 1
G55	Use preset coordinate system 2
G56	Use preset coordinate system 3
G57	Use preset coordinate system 4
G58	Use preset coordinate system 5
G59	Use preset coordinate system 6
G80	Cancel Modal Motion (Used with canned cycles)
G81	Canned cycle: drilling
G82	Canned cycle: drilling with dwell
G83	Canned cycle: peck drilling
G85	Canned cycle: boring, no dwell, feed out
G89	Canned cycle: boring dwell feed out
G90	Change coordinate system to absolute
G91	Change coordinate system to incremental
G92	Change the logical origin
G98	Initial level return mode in Canned cycle
G99	Retract-point level return mode in Canned cycle
G101	Move the rotary axis
G154	Use preset coordinate system 7
D	Change the tool index for cutter compensation (G40, G41, G42)
F	Change the Feed rate (Normal Speed)
H	Change the tool index for tool length compensation (G43, G49)
S	Change the Spindle Speed
T	Current tool index (M6)
M0	Pause
M1	Optional Stop
M2	End of program
M3	Turn on Spindle Clockwise
M4	Turn on Spindle Counterclockwise
M5	Turn off Spindle
M6	Change current Tool
M8	Turn on the Coolant
M9	Turn off the Coolant
M30	End of program and force turning off all of digital outputs
M99	End the program and restart it

JenCNC™

JenCNC combines features of both a CAD/CAM and a motion-control software package into a unique graphical user interface for controlling two to four SmartMotors™ in true 3-D coordinated motion. With real time 2-D and 3-D plotting to the screen, DXF-to-G-Code conversion, and conversational G-Code building, your CNC machine will be up and running in no time. JenCNC utilizes a simple serial interface to communicate and control SmartMotors. Using custom algorithms, motion is optimized for smooth control and continuous operation for all your machining needs. Due to its ability to run in a constant tangential velocity, regardless of changes in direction, the software is ideal where dispensing or flow rate of glue or adhesives is critical to the process.

JenCNC is built on many years of in-field testing and customer feedback in real-world applications, including:

- Routers (gantry machining of aluminum, foam, vinyl, and wood)
- Hot-wire EPS foam cutting
- Plasma (oxy-fuel) cutting with torch height control
- Machining forms for vacuum-form molding of plastics
- Milling machine retrofits
- Sign making
- Engraving
- CNC drilling
- Gasket cutting
- Adhesive applicators

DXF to G-code converter:

JenCNC's built-in DXF-to-G-Code converter allows you to open and view DXF files. Once in view, you can select entities in the order you wish to have the SmartMotors move. The converter includes a set-up for the Z-Axis. If you left click from one entity to the next, the Z-Axis motion G-Code is automatically generated.

All entities connected end-point to end-point will produce a continuous path until the need of the selection is reached. If the interpreter comes to a "Y" in the path, it will choose the path of least resistance (angular displacement).

There is an additional "Join" tolerance set-up. You can set the distance tolerance from one entity to the next in case the entities are not actually connected at their end-points.

If within that tolerance, the interpreter assumes connection and continues the path through the entities as one continuous motion. This can be very useful if the original DXF file was created freehand, as part of an artist rendering where O-Snaps may not have been used.

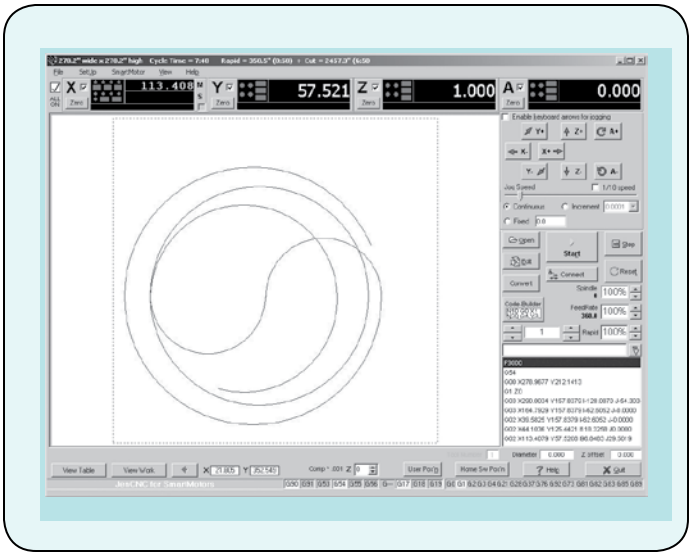

JenCNC features

- Upon start-up, JenCNC automatically detects motors and does a system update if any Animatics SmartMotor™ was changed out. This allows you to place the shortcut in the start-up directory to allow automatic restart on loss of power
- Machine tolerance levels can be set to ensure that no product damage occurs in the event of motor drop-out or path divergence
- Slow-down proportional-to-angle can be tailored to minimize machining time while providing the best surface finish through sharp turns
- Customizable G-Codes for user-defined tooling positions
- Customizable M-Codes for I/O control and SmartMotor commands or subroutine calls
- Ability to call G-Code subroutines
- Ability to repeat a section of G-code any number of times
- Z-Axis (tool length) offsets
- SAE or metric scaling
- On-screen and keyboard real-time jogging
- Auto-detection of Windows-compatible joystick for jog control
- CMM probing for setting tool offset
- User-selectable homing routines with configurable offsets
- Advanced settings screen includes events set-up for E-Stop conditions and fault recovery

JenCNC G-Codes Implementation

G-Codes not listed below are ignored by the interpreter.

JenCNC G-Codes:

Codes	Description
G00	Rapid Motion
G01	Linear Motion
G02	Clockwise Circular Arc
G03	Counterclockwise Circular Arc
G04	Dwell
G10	Coordinate System Reset
G12	Rewind the Rotary Axis
G17	X-Y Plane Selection (This is the normal plane of operation)
G18	Z-X Plane Selection
G19	Y-Z Plane Selection
G20 and G70	Inch Mode
G21 and G71	Metric Mode
G28	Go to Tooling Position
G37	Probing
G41	Left side Tool Compensation
G42	Right side Tool Compensation
G43	Tool Length Compensation
G53 - G59, G110.- G120	Coordinate offsets
G64	Turn On Outputs (On the Fly)
G65	Turn Off Outputs (On the Fly)
G76	Repeat a section of the program
G80	Clear any **G8x** modal mode
G81, G82, G83, G85, G86	Canned Drill cycle Routines
G90	Absolute Mode
G91	Relative Mode
G92	Set Coordinate System Offset

JenCNC M-Codes:

Codes	Description
M01	Program Pause
M02	End Program (See M3**0** below)
M03, M04	Turns on User Defined Input
M05	Turns off M03 selected Output
M06	Tool Change
M08	User Defined
M09	Turns M08 OFF
M14	Turn ON any single or multiple outputs
M15	Turn OFF any single or multiple outputs
M20	Send Torch to the Home Value position
M21	Continuous Path
M210	Set Maximum Angle Amount
M22	Continuous Path Off
M23	Slow at Vertex On
M24	Slow at Vertex Off
M25	Px.xxx Sets the pierce delay time with the P Word.
M30 & **M02**	Program End and Reset
M41, M42, M43	Turns on selected output as soon as motion starts
M45, M46, M47	Turns off selected output(s) immediately
M50 - M57	Waiting for Inputs from the real world
M60 - M79	Outputs to the real world
M80 - M85	User Programmable SmartMotor Command String Calls
M86 - M91	User Programmable Sound File Player Functions
M95	Dwell (exactly the same as a G04)
M98	Go To a Subroutine
M99	Return from a Subroutine

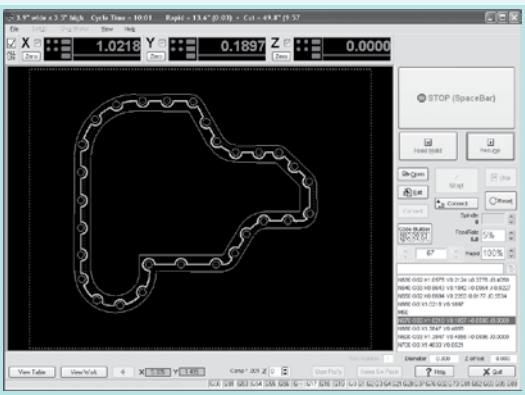

Proportional Glue Feed Control through Entire Path

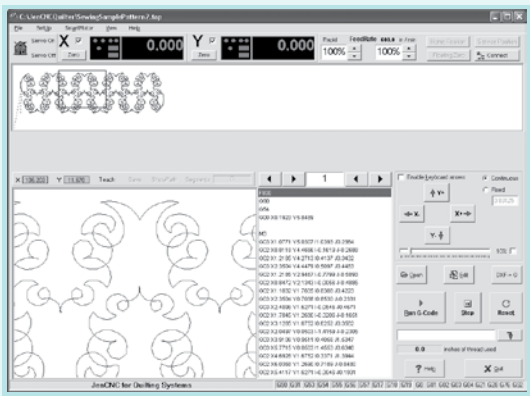

Automatic Sewing Head Motor control for Quilting Applications

Automatic Detection of X-Master and X-Slave motors

Animatics Smartmotors™ are capable of being a master controller to both other Smartmotors and other devices. As a result, often times the motors become a replacement to PLC's or other controllers in a system. At a minimum, when a Smartmotor is added to an existing system as an extension to a machine design, it may only require minimal hand shaking with the main controller while maintaining its own subsystem control independently.

Each SmartMotor can freely move between modes of operations including:

- Velocity Mode
- Torque Mode
- Relative Position Mode
- Absolute Position Mode
- Electronic Gearing
- Electronic Camming

Industries using SmartMotors:

- Aerospace
- Agricultural
- Automotive
- Autonomous vehicles
- Biomedical
- Chemical
- Cryogenics
- Government
- Life sciences
- Marine sciences
- Material handling
- Metal working machines
- Military
- Nuclear
- Oil industry
- Packaging
- Quality assurance inspection
- Security
- Testing and metrology
- Wood working machines
- and more

Applications using SmartMotors:

- Anode wire welding
- Automatic Web tensioning/alignment
- Auto-progression adjusting parts indexers
- Bearing inserters/presses
- Capacitor manufacturing
- Cappers
- Centrifuges
- Compression/tension testing
- Coordinate measuring machines
- Cut-to-length gage stops
- Dashboard controls button/switch testers
- Destructive testing
- Dicers
- Fillers
- Gimble mount accelerometer testing
- Glass tube cutting
- Glue dispensers
- GPS guided steering/drive control
- High speed indexing labelers
- Hydroelectric turbine nozzle control
- Infeed/outfeed stackers
- Manual handwheel over-ride
- Nut/bolt/screw drivers
- Pan & tilt bases
- Paper feeders/folders
- Parts redirectors
- Phase gearhead adjusting
- Pick & place palletizers
- Positive displacement pumps
- Shock load testing
- Step/tapered spool winders
- Tactile switch testing
- Tire tread grinding
- Topographical mapping
- Transformer coil winders
- Turbine blasé grinding
- Vision inspection
- Voice coil winders
- Wafer handlers
- Web guide
- Web tensioning
- Wire bonding
- and more

Concepts and Capabilities of the Animatics Product Range:

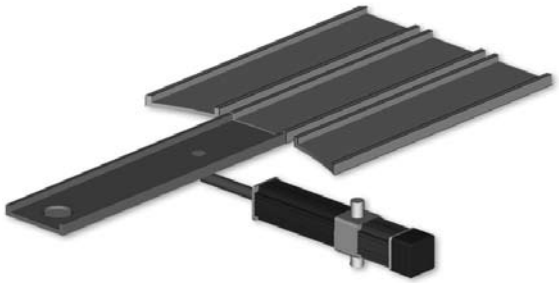

3-Position Parts Diverter

Simple servo upgrade from existing pneumatic systems, the Animatics SmartMotor™ can be placed into any system to replace 2-or 3-position air cylinders to allow for multi point programmable positioning while maintaining simple I/O trigger control from any PLC.

The SmartMotor is placed into Position Mode and programmed to move to a given set point upon I/O input trigger from the PLC.

Input / Output Stacker

Utilizing subroutines and variable counter, both Absolute and Relative Position Mode moves allow for start of stack and incremental stack shifts while maintaining parts counts. Having localized I/O within the integrated controls, the entire handling of parts can be dealt with by the stacker motor itself.

True distributed control at a fraction of the cost and footprint.

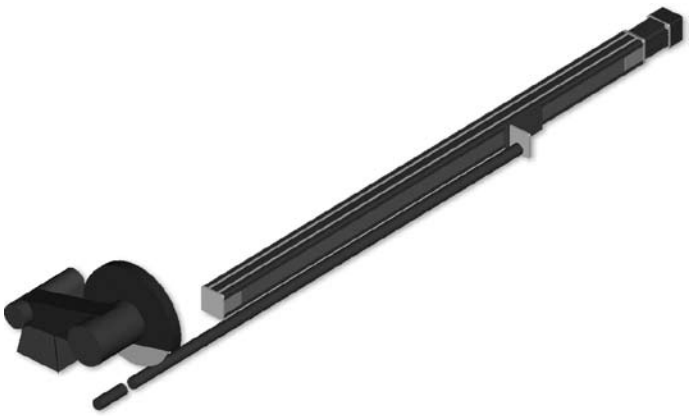

Programmable Cut To Length Saw Stop or Back Stop Gage

With the ability to program up to 1000 subroutines and 32K of extra data storage, the system can be programmed for hundreds of back stop positions and sequences.

No external PLC or PC would be required. A simple HMI can be utilized for interfacing

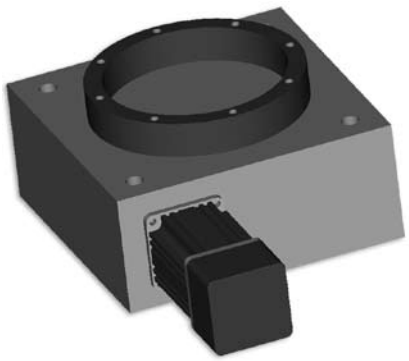

Programmable Rotary Index Table

Typical mechanical CAM based rotary index tables are fixed index and dwell devices. The Index distance cannot be changed and dwell is fixed as a function of assumed constant input RPM. By adding an Animatics Integrated SmartMotor™ to any servo rated worm gear box or flange output gear reducer, the system becomes a fully programmable rotary index table and can be programmed to any practical number of indexes and dwell times. Given the I/O and control capabilities, the dwells can be based on end-of-process contrary to fixed mechanical CAM thereby speeding up overall production cycle times.

Programmable Force Press-To-Fit

Animatics' integrated approach to drives and controls allows for closely regulated positioning and position error control. This results in highly repeatable torque limited machine cycles. The result is a very good solution for pressing parts together or any other force-limited application where both cycle time and proper force must be tightly regulated.

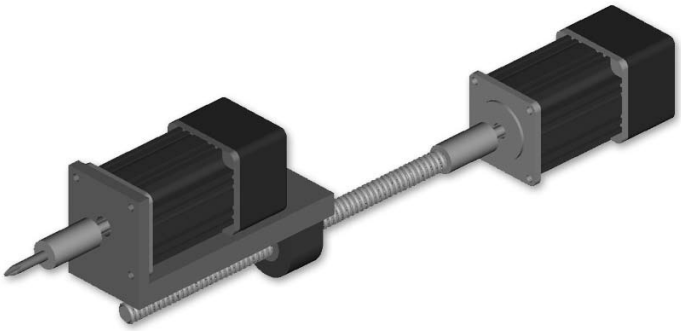

Drill & Tap/Nut Runner

Set rotating motor as master and have the linear axis electronically gear off of it to provide high speed drill and taps and screw feed control with limited torque. Adding proper torque detection, the unit can detect when a drill or tap has worn or become dull. As a nut/screw runner, it can pick up on cross thread, broken or stripped thread, missing part or jammed part.

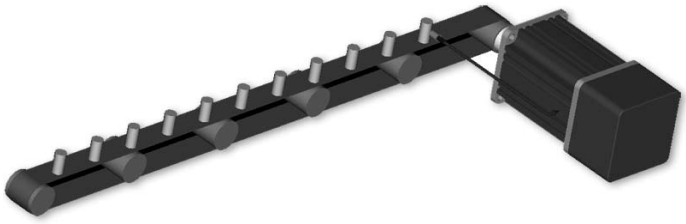

High Speed Parts Counter and Verification

The External Encoder Input can be used to read Quadrature Incremental Encoders, Step and Direction Input or just as a counter where input pulses can be counted at a rate up to 2 Megahertz. As a result, the motor can both feed parts and verify part count even at high rates of speeds and short distance between parts.

Multi-Axis Pick & Place

Up to 100 individually addressed motors can be placed on a communications bus allowing for easy coordination of multiple axis applications such as pick & place machines, palletizers, cross axis cutters, sorters, etc.

Example Applications

Print and Die Cut Alignment On-the-Fly

When using Electronic Gearing, phase offset adjustment moves can be achieved to properly align die cut processes with printed registration marks. This same technique can be used to ensure over-mold and multi-layer print alignment and even pocketed blister pack parts placement.

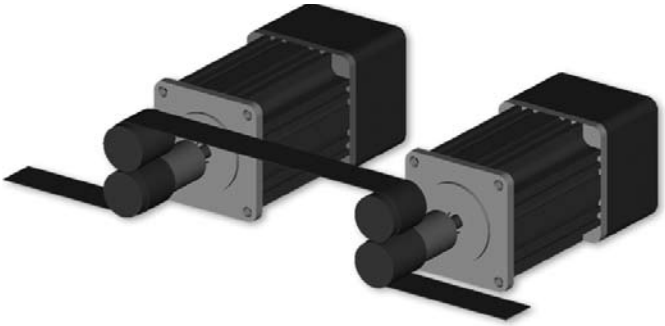

Process Tension Control

By the use of Phase Offset moves while electronically gearing Master to Slave, the controllers allow for easy tension control between two sets of nip rollers. Tension can be regulated by pre-test measurement or live analog, serial or digital feedback providing proper control of tension through varying speeds and up or downstream loads.

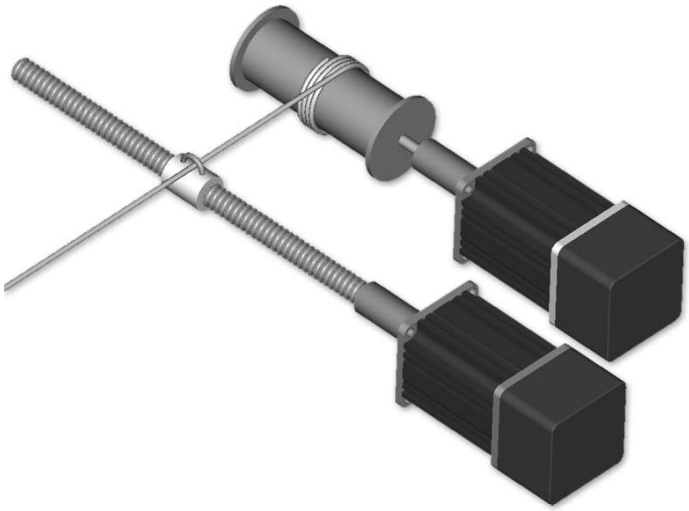

High Speed Traverse & Take-up Spool Winders

Use of programmable software travel limits, electronic gearing, and special firmware drive control, Winders can be set up to wind unlimited variations in spool width, wind angle and end-point dwell as well as step wind, stack wind and tapered wind.

With low inertia motors and high speed acceleration, very precise winding can be achieved in such applications as edge-wound voice coils, guitar strings, catheters and standard textile spool winding.

Parallel Axis Gantry

In wide gantry applications, the base axis can be moved with two motors; one Master, one Slave. Additionally, the master axis can follow product flow under the gantry for operations such as flying shears, material cutoff, cross-cut saws, etc.

Proper fault handling will prevent racking of the gantry in the event that either the Master or Slave faults out during a move. Homing is done only once at power-up. The Master and Slave sync up maintaining perfect alignment.

See our CNC software on pages 118-119 for full CNC capabilities.

SmartMotor™ Success Checklist

Follow these easy rules to assure success in using the Animatics SmartMotor™ to maximize your system's reliability. Please take a minute to see that your system design and implementation passes the test. Keep this page handy to document your settings and send it along with any motors returned for inspection or repair.

1. **Power supply selection is very important.**

☐ Provide for a means to keep the SmartMotor's voltage below 48 VDC by…

- ◯ operating at 48 VDC or less as nominal or,
- ◯ using a shunt near the motor or,
- ◯ adding a shunt to a switching power supply or,
- ◯ operating at 48 VDC or less and adding a shunt for a vertical application.

2. **Proper electrical interfacing is essential.**

☐ Refrain from creating any ground loops with the communications by…

- ◯ isolating the ground prong of the host PC for a single motor application or,
- ◯ isolating the motor's power supply for a single motor application or,
- ◯ using a communication isolation product to protect each axis or,
- ◯ operating only smaller motors at low power, like short SM23s or smaller.
- ◯ this does not apply when employing no serial communications at all.

☐ Refrain from creating any ground loops with the SmartMotor's I/O by…

- ◯ using the main or 5V power at the motor to operate any sensors or,
- ◯ using an opto-coupler to interface to the inputs or outputs or,
- ◯ using an I/O isolation product or,
- ◯ operating only smaller motors at low power, like short SM23s or smaller.
- ◯ this does not apply when employing no I/O connections at all.

3. **Properly sizing an Animatics SmartMotor™ for the application is critical.**

☐ Determine that the motor selected has the torque to handle the friction.

☐ Determine that the motor selected has the torque to support any vertical component of the load.

☐ Determine that the motor selected has the torque to accelerate the load.

☐ Determine that the motor's rotor inertia is properly matched to the load.

4. **Considering the thermal environment for the SmartMotor is important.**

☐ Consider the ambient temperature and avoid applications above 70°C ambient.

☐ Maximize the heat sinking capability of the motor's mount to any extent possible.

5. **Proper mechanical and environmental implementation is needed.**

☐ Assure motor shaft loading is within axial and radial limits.

☐ Be certain that the motor does not get exposed to fluids or excessive moisture.

☐ Insure relative humidity is <30% and non condensing.

⚠ Noise Filtering may be necessary

Ports A, B, C, D, and G are all classified as high speed input.

1. **Ports A and B:** Ports A and B may be configured as Phase A and B encoder input or Step and Direction input. To ensure proper operation when following external encoders, it is strongly advised to use Line Driver encoders or encoders with true push-pull drive capability. This allows up to 1.5MHz input frequency. Open Collector output encoders will not work above 20KHz or so typically due the inability to drive input capacitance well enough.
2. **Ports C and D:** Both Ports C and D default as Over Travel Limit inputs. They can be triggered by a negative edge transition as fast as 5 microseconds allowing optimum fail safe detection of over-travel. However, as a result, in noisy systems, it may require capacitive filtering to prevent false triggers from static or other induced noise.
3. **Port G:** Port G defaults as the "sync" or synchronous trigger input. This means any time it goes low, the processor issues a "G" command. The purpose of this is to allow pre-condition setup of motion profiles and then via hardware input the user may synchronize multiple motor/axis starts at the exact same time. However, similar to the Over Travel limit inputs, Port G can detect input pulses down to 5 microseconds. To ensure no false triggers, some system installs may require capacitive filtering to avoid false triggers. In all cases above, typical filtering is via 10 to 100 picofarad ceramic capacitors tied from the input pin to ground. This is only a recommendation; system characteristic may vary depending on surrounding equipment.

⚠ WARNING Important Information, please read carefully

Class 4 PLS2 Series SmartMotors may be used as upgrades to replace older PLS series SmartMotors. However, ALL PLS2 series SmartMotors have twice the encoder resolution of prior equivalent sized PLS SmartMotors where available. As a result, on existing machines, program changes will be required to maintain proper distances, velocities and acceleration. Additionally it may require changes to following error limits and PID tuning parameters. Please consult Users Guide and help files as necessary.

SmartMotors Hardware and Control Limitations

Each SmartMotor is an integrated motion controller, drive amp and motor.

As with any motion controller, care should be taken with regard to connections, communications, and control. Proper grounding and Shielding techniques should be observed and utilized.

Standard SmartMotor Controller and Drive Specifications:

All Standard SmartMotors should be powered from 18VDC to 48VDC. Under no circumstances should they be allowed to run off of any higher voltages. Lower voltages could cause a brownout shutdown of the CPU or what would appear as a down power reset under sudden load changes. If power is reversed on any standard SmartMotors, immediate damage WILL occur and the SmartMotor will no longer operate.

Note: During hard fast decelerations, a SmartMotor can pull up supply voltages to the point of damage if a shunt resistor pack is not used.

CPU Power:

All SmartMotors have an internal 5VDC Power supply to run the internal CPU. This supply can be easily damaged if an external voltage source of a higher potential is applied. Do not exceed 5VDC on and I/O pin or 5VDC pin on any SmartMotor.

I/O Restrictions and Limitations:

Each on-board I/O pin has a minimum amount of protection consisting of a 100-Ohm Current limit resistor and a 5.6VDC Zener diode. Each I/O pin also has a 5Kohm pull-up resistor. When assigned as outputs, they act as a push-pull amplifier that drives hard to either the positive or negative 5VDC rail. This means they are not open-collector I/O pins. Each I/O Pin can sink up to 12mA and source up to 4mA. Exceeding this could result in damage to the I/O port.

Communications:

Each SmartMotor has a 2 wire RS-232 port. This port meets IEEE standards with full +/- 12VDC potential on the transmit line. Proper serial ground signal referencing and shielding techniques should be used. Under no circumstances should the shield of a cable be used for the RS-232 ground reference. This could result in noise or corrupt data as well as ground loops that could damage the serial port chip set.

Each SmartMotor boots up default to the ECHO_OFF state. This means that nothing received is transmitted or echoed back out. This is important to remember in serial “daisy-chain” set-ups. They also boot-up defaulted to base address zero meaning they will listen and respond to any incoming valid SmartMotor commands.

Hardware Protection Faults:

All PLS2 series SmartMotor protection faults (over Current and over Temp) result in dynamic braking on error. This means the windings are shorted out to dissipate power as fast as possible.

⚠ WARNING

All motors WILL trip on thermal limit at 85Deg.C. They will not reset until cooling back down below 80Deg.C SmartMotors should be operated between 0 and 85Deg.C non-condensating. In other words, reaching dew-point can cause moisture to condense on the encoder disk causing loss of integrity of position feedback. SmartMotors should not be started up cold below zero Deg. C.

Software Protection Faults:

Limit switch inputs and Position error limits are both “software” protection faults. This means they are not firmware unchangeable. The effects of Limit switches and Position error can be changed via valid software commands or set-up parameters.

Position error is predicated by a value set by the user and can drastically effect SmartMotor response under varying load conditions and tuning. Limit switches can be set up to cause the SmartMotor to servo in place instead of free wheel. Refer to specific firmware addenda for various limit switch options and capabilities.

Motor Torque Limits: {AMPS command and T (Torque) command}:

Motor T (torque) command is only for use in Mode Torque (MT). It has no effect on motor operation outside of Mode Torque.

The AMPS command has effect over all other modes of operation. It limits absolute maximum power available from the drive amp to the motor windings as a function of percent duty cycle of PWM (Pulse Width Modulation). The AMPS command should be used when it is desired to limit motor torque to a sensitive or torque input limited load. It may also be used to reduce the chance of reaching peak over current errors on high acceleration applications.

Error Handling, Motor Status Bits and Internal Conditions:

SmartMotors have a 16 Bit status word that contain interrupt registers triggered by selected events. These events include Position Errors reached, Over Current reached, Limit switch conditions, Syntax errors and so on. In addition, in the newer SmartMotors, Bus Voltage, Drive Current, and SmartMotor Temperature are also available. By proper use of these status bits very simple and very flexible error handling can be achieved. Motors can be made to respond under varying load conditions in different ways and recover from any given software or hardware fault in a controlled manner.

⚠ WARNING Important Information, please read carefully

Switching Power Supplies:

Most switchers will go into an OFF state on over-voltage. Few of them have a buck-regulator that prevents over-voltage. The ones that do are very costly and large. Always use a Shunt when using a switching power supply to aid in suppression of bus over-voltage. Switching Power supplies should be sized to provide maximum expected current for the entire motor system under the worst load considerations. This is because switchers have no “reserve” like Linear Power Supplies do. When they reach maximum current, they shut down or reset.

Mechanical Brakes:

Any time the load can be easily back driven or is in a vertical orientation, an electromechanical fail-safe brake is highly recommended. Under no situation should a PLC or external controller be used to control a fail-safe brake on a servo. The response time will be diminished to the point of defeating protection. Instead, use the SmartMotor interrupt control features stated here:

Use the **BRKG** command in conjunction with the BRKTRJ or BRKSRV commands:

```
BRKC    'send automatic brake control signal to Port C
BRKG    'send automatic brake control signal to Port G
BRKSRV  'Engage brake on any motor shaft fault
        'Position Error, Limit Switch Error,
        'Continuous Over Current/Over Temp)
BRKTRJ  'Engage brake when not moving (Follows the
        'Bt "busy trajectory" status bit)
```

In making use of selected commands from above, the brake will get a signal to engage (be de-energized) within 250 to 500 microseconds of its trip condition. Using the PLC will cause a delay of anywhere from 4 to 10 milliseconds due to scan time, process time and brake release time. By then, the current in the control could have already well exceeded limits.

Position Error Limits:

Let's suppose you have a maximum allowable position error limit of 1000 encoder counts. The SmartMotor can hit a hard stop and go up to 999 encoder counts into position error before a trip condition is met.

The time it takes to get to that position error may be slow or fast depending on the speed you are moving.

Set "E" to the lowest value possible to allow continued machine operation without spurious position error faults occurring.

Amplifier Tuning:

Let’s suppose you have "tight" tuning of KP>300 or so and KD>2000 or so. This is just an example of slightly tight tuning, but not too high. The higher the numbers, the faster motor current will rise under a given increase in position error. Collectively, with the above mentioned facts about "E" maximum allowed position error, the current may rise much faster. It is best to ratio acceptable tuning values with good Position Error values so as to maintain the lowest running position error with the lowest value of "E" possible. The ironic thing here is that usually to get decrease following error implies increasing tuning. This is true, but for example: KV (velocity feed forward) and KA (acceleration feed forward) are better means to achieve this goal.

These tuning values lower position error while moving without increasing motor current because they shift the motor position command forward in the trajectory for the entire move, compared to during the dynamics of changes in moves. As a result, you get lower peak currents in the motor.

Power Supply Voltage Levels:

The higher the voltage, the faster the motor can move and the faster it can accelerate. This is a good thing, but in conjunction with that, the higher the voltage, the closer to a peak voltage for over-voltage breakdown of the controller. Also, the higher the voltage, the faster a rate of change of current can occur. It is a risk with any application to get faster response by moving towards a higher voltage. Typically speaking, it is the dynamics of sudden changes that increases risk by a "x^2" factor whereas the continuous load risk is only a direct ratio increase. This is because rate-of-change in current is proportional to acceleration which is the square of velocity, i.e. x^2. For safety sake, a 42VDC supply for a 48VDC system gives good margin with little speed losses.

Firmware Safety Control Options:

The PLS2 firmware has the ability to suppress back-EMF voltages any time the calculated trajectory has been exceeded by actual motor motion. In other words, the processor is looking at where it should be compared to where it actually is. Any time the motor exceeds dynamic position per calculated trajectory, the drive amplifier shunts power to maintain dynamic position control. As a result, excessive currents are suppressed at a rate of response of ~250 micro seconds.

Additionally, if the motor faults out for either Position Error, Travel Limit, or Thermal Limits, it will automatically short out the windings and dynamically stop the shaft.

Downloading and Uploading Programs

Why do I get a pop-up that says: "EEPROM locked or missing when I try to download a program"?

This only occurs under the following conditions:

The EEPROM is locked or missing in older Molex styled motors with external EEPROMS.

You are attempting a download to a "Plus" version firmware motor that is in a faulted condition. While faulted, the newer Plus version firmware will not allow a program to run. When SMI attempts a download, it first sends a blank test program that it tries to run. If the program does not run, then SMI assumes the EEPROM is either locked or missing. SMI2 does not pop up this message because it knows how to test for it ahead of time.

Why will SMI2 not let me download to a SmartMotor that is moving or running a program?

Due to safety concerns, the new SMI2 software forces you to turn off the SmartMotor holding current or stop a running program prior to download to prevent possible unexpected motion. Example: Let's suppose you have a program that places the SmartMotor in Velocity mode or Torque Mode and then you try to download without first tuning off the motor. During Travel, it will crash into the end stop while downloading. For safe operation we want to ensure the SmartMotor is in the OFF condition.

When I start a download, the motor stops everything it was doing. Why?

When SMI starts a download of a new program, it issues the END command to stop prior code form running. This is to prevent processor memory pointer errors while the EEPROM header portion is being re-written. It is also for safety reasons.

Is there a way to prevent someone from uploading a program?

Yes. You can protect your program from being seen or copied by sending LOCKP to the motor via serial port. The LOCKP command is a means of locking the program. It does not prevent a user from downloading a new program, but it does prevent them from seeing the program you have downloaded.

I/O Handling

Since the I/O is non-isolated 5 VTTL, are there any options for 24 VDC I/O?

Yes. There are a few options: Animatics provides cables with built in 5 V to 24 V isolated logic circuits right in the connector hood. This allows the user to have a choice of either 4 Inputs and 3 Outputs or 5 Inputs and 2 Outputs at 24 VDC. They can be set as sinking or sourcing. The partial Part numbers are CBLIO43 or CBLIO52 and can be purchased in lengths from 3 to 10 meters.

The DINIO7 is a DINrail mount breakout board that also provides a means of isolation using Industry Standard Opto-22, Gordos, or Grahill I/O modules such as ODC, IDC, OAC and IAC series. The DINIO7 also allows interconnection to other motors and their I/O via a built-in back plane.

Are there any Expanded I/O options?

Yes. Each Motor has the ability to control expanded I/O via the AniLink™ protocol or RS-485. There are several Digital and Analog expansion options that allow up to a maximum of 64 channels of expanded I/O. In each case, Ports E and F are used to communicate with the AniLink Products.

Also available is the DIN-RS485 I/O card. Each card is a Din-rail mount 16 channel card with 8 24 VDC sourcing inputs and 8 24 VDC sourcing outputs. All I/O are optically isolated. Up to 200 DIN RS-485 cards can be on a single RS-485 bus controlled by SmartMotors. The outputs are short circuit protected.

Are the I/O pins sourcing or sinking? (PNP or NPN?)

A straight answer is neither. They are actually CMOS compatible totem-pole outputs with the ability to be read as inputs. What this means is that when any given I/O pin (Port A through G) is set as an output (via UAO through UGO commands), and then is set to logic 1 or 0 (via UA-1 or UA-0 for example), the CMOS totem pole MOSFETs either hard drive the output pin to 5 VDC or 0 VDC. As a result, they are not open-collector outputs.

They BOTH source AND sink. However: when set as inputs via UAI through UGI commands, nothing is connected to the I/O pin at the connector; the input will appear as a logic level 1 (5 VDC). This is because ALL I/O pins have an internal 5 kOhm pull-up resistor tied to them.

What type of electrical protection/isolation does each I/O pin have?

Each I/O pin has a 100 Ohm series current-limit resistor tied to a 5.6 VDC over-voltage limiting zener diode. The user ties into the 100 Ohm resistor directly. The connection between the 100 Ohm resistor and zener diode ties in directly to the CPU pin. This is why the motors are limited to 5 VTTL I/O logic levels only. Animatics does, however, provide 24 VDC I/O adapters and adapter cables for converting the 5 VDC I/O to optically isolated 24 VDC logic for connection to PLCs and other equipment. Please visit the Animatics website and search under Cables and Accessories.

Power Supplies

Which is better, Linear or Switcher Supplies?

Linear supplies are better suited for inductive loads. SmartMotors are inductive loads. Linear supplies can handle high current surges typically caused by starting and stopping of servo motors.

However, linear supplies have what is known as voltage droop. This is characteristic of voltage dropping down with an increase in load. Typically, unregulated torroidal transformer supplies will drop 4 to 7% and E-Core types (the big square transformers) are >10%. Switchers have no voltage droop until they reach maximum load. Then they just drop completely to zero volts. However, since they maintain a tight control over voltage up to the trip point, they can typically aid greatly in reaching maximum speed and acceleration of a given servo. However, the switching supply must be sized for the maximum expected peak current draw of the motor system. A linear supply only needs to be sized for continuous load. Linear supplies have a large capacitance to supply much higher current surges when needed, so this is more of an application specific question.

What concerns are there with maximizing voltage on the supply?

The higher the voltage, the faster the SmartMotor can move and the faster it can accelerate. This is a good thing. However, in conjunction with this, the higher the voltage, the closer you get to a peak voltage that can cause over-voltage breakdown of the controller. Also, the higher the voltage, the faster a rate of change of current can occur. It is a risk with any application to get faster response by moving towards a higher voltage.

Typically speaking, it is the dynamics of sudden changes that increases risk by a "x^2" factor whereas the continuous load risk is only a direct ratio increase. This is because rate-of-change in current is proportional to acceleration which is the square of velocity, i.e. x^2. For safety sake, a 42 VDC supply for a 48 VDC system gives good margin with little speed losses.

How do I size Power Supplies?

The quick answer is "more is better".

First, be sure you have the correct SamrtMotor for the job. Once that has been done, take the nominal power rating for that motor and you should size a LINEAR supply to provide about 10% more power to allow for longer sustained current loads. Any LINEAR supply will typically provide more than enough peak current. This is where sizing gets tricky with Switch-Mode Power supplies. "SWITCHERS" typically come with some rated voltage and current.

For example: 48 VDC at 6 Amps.

Well, that is just it…this can provide 48 VDC nailed to the wall all the way up to 6 Amps, but if any more current is applied, the power supply will drop out to zero VDC and typically reset. Any time you wish to use switchers, you need to take the peak expected load of the motor and size the switcher's continuous rating for that contingency.

As a rule of thumb, any 23 Frame SmartMotor™ "can pull as much as 12 Amps instantaneous. Most 23 Frame SmartMotors will not pull more than about 9 Amps instantaneous. A 10 Amp switcher can supply any 23 Frame samrtMotor for MOST applications.

With a 34 Frame SmartMotor will require a 20 Amp continuous rating to be sure you will not get a tripped power supply. 34 Frame SmartMotors can pull as much as 40 Amps or more for a few milliseconds, so as originally stated: "Bigger is better," especially when it comes to switchers.

Back EMF

How do I protect against Back EMF?

Short Answer: Don't back-drive the SmartMotor.

Problem is, back-driving the SmartMotor isn't the only means to produce Back EMF. Read the FAQ on "What is Back EMF and where does it come from?"

The best means to protect against Back EMF are to use a shunt such as the active 48 VDC 100 Watt shunt supplied by Animatics. It drops a 100 watt load onto the bus any time bus voltage exceeds 49.5 VDC. It removes the load when Bus voltage goes back down below 46 VDC.

It will work with Switching or Linear supplies as long as no-load voltage does not stay above 48 VDC. Otherwise the shunt will be on all the time. Another method of protection is to use a mechanical break controlled by the Break commands in the motor. The SamrtMotor can respond to a fault and send a signal to the break within 250µseconds to help hold the shaft from back driving. None of these ideas helps against hitting a hard stop. Please read the FAQ on Back EMF for more.

What is Back EMF and where does it come from?

Back EMF is the voltage generated when a rotor is moving within the stator of any motor. It is literally the motor acting as a generator. There is a common rule that Back EMF or voltage generated is proportional to Velocity. This is true in a constant velocity condition only. Back EMF is actually proportional to the rate of change of magnetic flux (magnetic field strength) inside the stator windings of the motor. The faster the rate of change, the higher the voltage rises. In other words, RPM of the motor shaft does not have to be that high to have very high voltages created.

Here is an example:

Take any relay coil or solenoid valve coil in a 24 VDC system. When it is energized, the magnetic field pulls in the contactor or pilot valve. The magnetic flux reaches saturation and a DC electromagnet is then formed. When the power is removed from the coil, the magnetic flux rapidly collapses because there is no forward voltage to maintain it. Since the circuit is not electrically open, there is nothing to prevent the magnetic flux from collapsing

rapidly at a hyperbolic rate.

The result is something called “inductive-kick”. This kick or spike in voltage for a 24 VDC coil can reach very high voltages and currents on the order of 100 times that of the original applied voltage, i.e. 2400 VDC! This is why it is very common to place reverse polarity diodes across relay coils and solenoid valve coils. It protects the system from high voltage spikes. The same thing occurs when a SamrtMotor hits a hard stop. Suddenly, the rate of change of magnetic flux in the stator windings skyrockets upward because the rotor stopped moving. This sudden change causes an excessive voltage and current spike in the controller and can damage components.

Now what can we do about it? Practically speaking, not much. We could design the drive stage to be able to take the hit of a fast hard stop. But the drive stage would be very large. The controller would have a lot more components in it and the practicality of it would be diminished. The SmartMotor would grow in size for the same torque output to 3 times larger. This is just not practical.

I was told the SmartMotor failed due to over-voltage, but I never back drove it or ran it fast...

HARD STOP CRASHES:

The best recommendation for preventing damage to the SamrtMotor/controller in the case of hitting a hard stop is to place a limit switch near the hard stop that trips the motor off line just prior to hitting the stop. The best way to prevent it beyond that is to prevent the cause of hitting the hard stop in the first place.

If this is due to jogging the SamrtMotor in Velocity mode and not letting the jog switch in time, then jog in position mode instead and use the “X” or “S” command to stop the SmartMotor when the jog switch is released. In any case, ***much care should be taken to be sure the SmartMotor is not intentionally or unintentionally allowed to hit a hard stop while under normal speeds and load conditions.***

Communications

I have a SmartMotor that will not communicate no matter what I try. What should I do?

It is possible to unintentionally write and download a program that will lock up the CPU or prevent serial communications. If you power it up and there is one or more LED lit up, then try the following: Isolate the SmartMotor by itself such that you have a single motor power and communications cable between the SmartMotor and the PC. Connect the motor to the PC serial Port, but DO NOT power up the SmartMotor. In other words, have the power supply either disconnected or turned off. Then start up the SMI software and click on the TOOLS drop-down menu.

Under TOOLS, click on “Communications Lock-up Recovery” and a pop-up window will tell you to do what is described above. Then click NEXT. The Lock-up recovery utility will begin transmitting multiple “E” characters to the motor. It will tell you to power-up the SmartMotor at this point.

Then it will wait about 1 second and attempt to establish communications. If it does establish communications, it will tell you and then prompt to either clear the program or upload the program. At this point, it is advisable to clear the EEPROM so as to down-power reset the motor and reestablish communications normally. This way you will know if it was just a program issue or a hardware issue.

If you apply power and there are no LEDs lit up on the motor, then there is a major problem with it electrically. It will have to be sent back for repair.

Occasionally I lose communications and don’t know why. What could be causing this?

Here are some general things to consider:

Shielding and Grounding must be done properly to insure good signal integrity.

Long character strings should be avoided. the receive buffer is only 16 bytes long.

Never use the shield as the ground reference connection for RS-232 or RS-485.

Make sure there are no non-terminating strings being transmitted. If a string is not followed by a carriage return or space character, the SmartMotor will hang indefinitely while waiting on the terminating character. It is done this way to allow priority to the serial ports over any downloaded program execution.

How far can I transmit on RS-232 or RS-485?

“RS” in the RS-232 and RS-485 specification means “Recommended Standard.” Not every company or chip manufacturer actually meets the “RS.”

The IEEE specification states that RS-232 single-ended signal is SUPPOSED to be +/-12 VDC or a 24 VDC swing from logic zero to logic 1. The specification for RS-485 is +/-5 VDC Differential. By voltage levels, RS-232 will logically be able to transmit much further. By noise immunity, a differential signal should be able to reach its destination “cleaner”. But the reality is similar to the following analogy: a clean whisper can’t be heard a mile away, but a loud guttural voice can. So in reality, RS-232 can transmit further, but RS-485 transmits cleaner.

Also note that the higher the voltage level, the higher the induced noise must be to overcome the signal, so RS-232 isn’t so bad after all. As far as actual distances go, there are applications in the field running 250 feet on RS-232. RS-485 just can’t drive the cables well enough to go beyond 100 feet without experiencing loading problems. Also, RS-485 is a parallel bus. The more motors you add, the shorter the overall practical distance due to bus loading. RS-232 is serial. Therefore, one motor transmits directly to only one “receive” buffer. This means compounded bus loading does not occur. This is another reason RS-232 can actually transmit further.

Calculating Power: the Real Story

Unit of electrical power where : Watts =(volts)(amps) or W=V*A Watts are a unit consisting of time since amps are a measure of electron flow per unit time.

For this reason, Torque cannot be directly equated with Watts or Horsepower without consideration of RPM where revolutions per min contains time that would cancel out the time in watts to give you torque. This is why Horsepower is a useless unit of measure when sizing SmartMotors for motion control applications!

One horsepower equals 746 watts and has nothing to do with torque by itself!!!!!

Formula for Power to Torque:

$$\text{Power (HP)} = \text{Power (Watts)} \times 746$$

$$\text{Power (Watts)} = \frac{N\ (\text{RPM}) \times T\ (\text{ft-lbs})}{7.04}$$

$$\text{Power (HP)} = \frac{N\ (\text{RPM}) \times T\ (\text{ft-lbs})}{5252}$$

Torque required will be:

$$T\ (\text{ft-lbs}) = \frac{\text{Power (Watts)} \times 7.04}{N(\text{RPM})}$$

$$T\ (\text{ft-lbs}) = \frac{\text{Power (HP)} \times 5252}{N(\text{RPM})}$$

All references on the right side of this page are used in the formulas on the pages that follow.

Symbol	Definition	SI	English
C_G	Circumference of Gear	m (or cm)	in (or ft)
$C_{P:\,1,\,2,\,3}$	Circumference of Pulleys, 1, 2, or 3	"	"
D_G	...(pitch dia.) of Gear	"	"
D_{PM}	...(pitch dia.) of Pulleys on Motor	"	"
$D_{P:1,\,2,\,3}$	...(pitch dia.) of Pulleys 1, 2, or 3	"	"
e	efficiency of mechanism or reducer	%	%
F	Forces due to	N	lb
F_{Fr}	...friction (Ffr = mWL cos g)	"	"
F_g	...gravity (Fg = WL sin g)	"	"
F_p	...Push or Pull forces	"	"
g	gravity accel constant	9.80 m/s^2	386 in/s^2
J	mass moment of inertia for	kg-m^2	lb-in^2
J_C	...Coupling	g-cm^2	oz-in^2
J_G	...Gear	etc.	or
J_L	...Load " in-lb-s2		
$J_{L\rightarrow M}$	...Load reflected to Motor	"	or
J_M	...Motor	"	in-oz-s^2
$J_{P:\,1,\,2,\,3}$	...Pulley or sprocket 1, 2, or 3	"	"
J_{Total}	...Total of all inertias	"	"
J_S	...lead Screw	"	"
N_r	Number ratio of reducer	none	none
P_G	Pitch of Gear, sprocket or pulley	teeth/m	teeth/inch
P_S	Pitch of lead Screw	revs/m	revs/inch
T	Torque...(for "required" Calculations)	Nm	in-lb
T_L	...at Load (not yet reflected to motor)	"	"
T_P .	...due to Preload on screw nut, etc.	"	"
V_L	linear Velocity of Load	m/s	in/s
ω_M	angular/rotational velocity of Motor	rad/s	rps or rpm
W_L	Weight of Load	kg	lb
W_B	Weight of Belt (or chain or cable)	"	"
W_T	Weight of Table (or rack & moving parts)	"	"
θ	rotation...	revs	revs
$\theta_{a,\,c,\,or\,d}$	rotation during accel, decel, etc.	"	"
θ_L	rotation of Load	"	"
θ_M	rotation of Motor	"	"
μ	coefficient of friction	none	none
γ	load angle from horizontal	degrees	degrees

Typical Friction Coefficients $(F_{fr} = \mu W_L \cos\gamma)$

Materials	μ	Mechanism	μ
Steel on Steel	~0.58	Ball Bushings	<0.01
Stl. on Stl. (greased)	~0.15	Linear Bearings	<0.01
Aluminum on Steel	~0.45	Dove-Tail Slides	~0.2++
Copper on Steel	~0.30	Gibb Ways	~0.5++
Brass on Steel	~0.35		
Plastic on Steel	~0.15-0.25		

Motion Mechanism and Motion Equations		Inertia, Torque Equations
Gearing 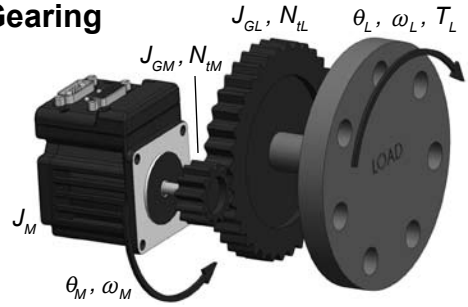	$N_r = \frac{N_{tL}}{N_{tM}}$ $\theta_M = N_r \times \theta_L$ $\omega = N_r \times \omega_L$	$J_{Total} + J_M + J_{GM} + J_{GL \to M} + J_{L \to M}$ $J_{GL \to M} = \left(\frac{1}{N_r}\right)^2 \times \frac{J_{GL}}{e}$ $J_{L \to M} = \left(\frac{1}{N_r}\right)^2 \times \frac{J_L}{e}$ $T_{L \to M} = \frac{T_L}{N_r \times e}$
Rack & Pinion 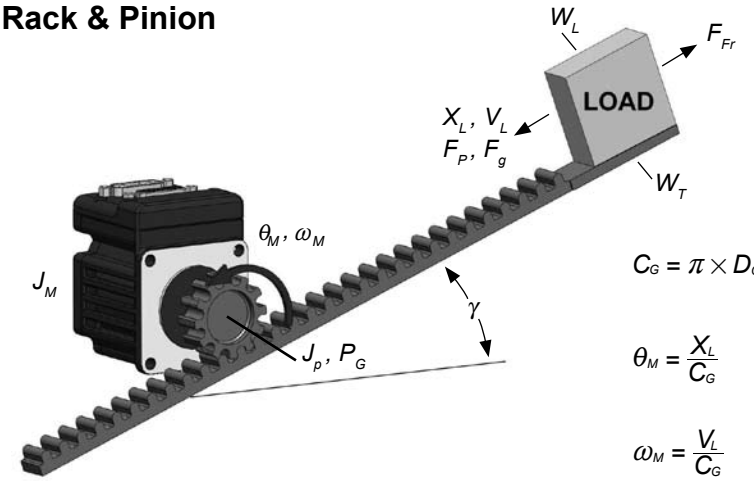	$C_G = \pi \times D_G = \frac{N_t}{P_G}$ $\theta_M = \frac{X_L}{C_G}$ $\omega_M = \frac{V_L}{C_G}$	$J_{Total} = J_M + J_G + J_{L \to M}$ $J_{L \to M} = \frac{(W_L = W_T)}{g \times e} \times \left(\frac{D_G}{2}\right)^2$ $F_g = (W_L + W_T) \times \sin\gamma$ $F_{fr} = \mu \times (W_L + W_T) \times \cos\gamma$ $T_{L \to M} = \left(\frac{F_P = F_g + F_{fr}}{e}\right) \times \left(\frac{D_G}{2}\right)$
Belt Drive 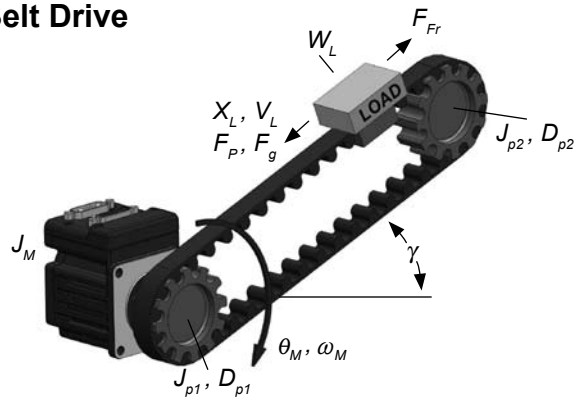	$C_{P1} = \pi \times D_{P1} = \frac{N_t}{P_G}$ $\theta_M = \frac{X_L}{C_{P1}}$ $\omega_M = \frac{V_L}{C_{P1}}$	$J_{Total} = J_M + J_{P1} + \left(\frac{D_{P1}}{D_{P2}}\right)^2 J_{P2} + J_{Load}$ $J_{L \to M} = \frac{(W_L + W_B)}{g \times e} \times \left(\frac{D_{P1}}{2}\right)^2$ $F_g = (W_L + W_B) \times \sin\gamma$ $F_{fr} = \mu \times (W_L + W_T) \times \cos\gamma$ $T_{L \to M} = \left(\frac{F_P + F_g + F_{fr}}{e}\right) + \left(\frac{D_{p1}}{2}\right)$
Leadscrew 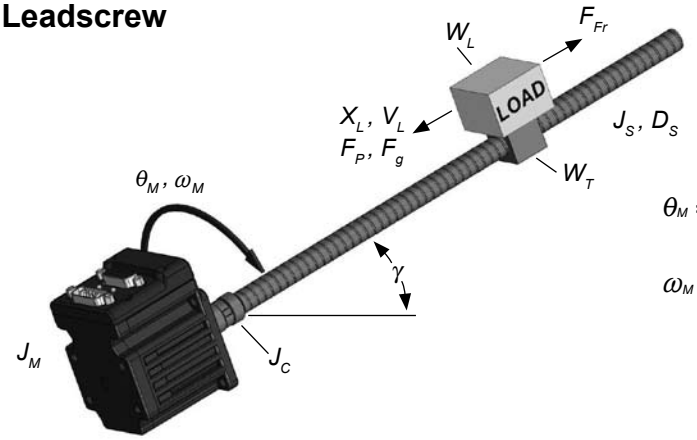	$\theta_M = P_S \times X_L$ $\omega_M = P_S \times V_L$	$J_{Total} = J_M + J_C + J_S + J_{L \to M}$ $J_{L \to M} = \frac{(W_L + W_T)}{g \times e} \times \left(\frac{1}{2\pi \times P_S}\right)^2$ $F_g = (W_L + W_T) \times \sin\gamma$ $F_{fr} = \mu \times (W_L + W_T) \times \cos\gamma$ $T_{L \to M} = \left(\frac{F_P + F_g + F_{fr}}{2\pi \times P_S \times e}\right) + T_P$

Acceleration
A change in velocity as a function of time. Acceleration usually refers to increasing velocity, and deceleration to decreasing velocity.

Accuracy
A measure of the difference between expected position and actual position of a motor or mechanical system. Motor accuracy is usually specified as an angle representing the maximum deviation from expected position.

Ambient Temperature
The temperature of the cooling medium, usually air, immediately surrounding the motor or another device.

Angular Accuracy
The measure of shaft positioning accuracy on a servo or stepping motor.

Back EMF
The voltage generated when a permanent magnet motor is rotated. This voltage is proportional to motor speed and is present regardless of whether the motor winding(s) are energized or de-energized.

Breakaway Torque
The torque required to start a machine in motion. Almost always greater than the running torque.

Brushless Motor
Class of motors that operate using electronic commutation of phase currents, rather than electromechanical (brush-type) commutation. Brushless motors typically have a permanent magnet rotor and a wound stator.

Closed Loop
A broadly applied term, relating to any system in which the output is measured and compared to the input. The output is then adjusted to reach the desired condition. In motion control, the term typically describes a system utilizing a velocity and/or position transducer to generate correction signals in relation to desired parameters.

Cogging (Cogging Torque)
A term used to describe non-uniform angular velocity. Cogging appears as a jerkiness, especially at low speeds.

Commutation
A term which refers to the action of steering currents or voltages to the proper motor phases so as to produce optimum motor torque. Proper commutation means the relationship of the Rotor to the Stator must be known at all times.

1. In brush type motors, commutation is done electromechanically via the brushes and commutator.
2. In brushless motors, commutation is done by the switching electronics using rotor position information obtained by Hall sensors, single turn absolute encoder, or a resolver.

Controller
A term describing a functional block containing an amplifier, power supplies, and possibly position-control electronics for operating a servomotor or step motor.

Current at Peak Torque (IPK) (Amperes)
The amount of input current required to develop “peak torque”. This is often outside the linear torque/current relationship.

Current, Rated
The maximum allowable continuous current a motor can handle without exceeding motor temperature limits.

Detent Torque
The maximum torque that can be applied to an un-energized step motor without causing continuous rotating motion.

Duty Cycle
For a repetitive cycle, the ratio of on time to total cycle time. Duty cycle (%) = [On time / (On time + Off time)] x 100%

Dynamic Braking
A passive technique for stopping a permanent magnet brush or brushless motor. The motor windings are shorted together through a resistor which results in motor braking with an exponential decrease in speed.

Efficiency
The ratio of power output to power input.

Electrical Time Constant (te) (Seconds)
The time required for current to reach 63.2% of its final value for a fixed voltage level. Can be calculated from the relationship te=L/R where L is inductance (henries) and R is resistance (ohms).

Encoder
A feedback device which converts mechanical motion into electronic signals. The most commonly used, rotary encoders, output digital pulses corresponding to incremental angular motion. For example, a 1000-line encoder produces 1000 pulses every mechanical revolution. The encoder consists of a glass or metal wheel with alternating transparent and opaque stripes, detected by optical sensors to produce the digital outputs.

Feedback
A signal which is transferred from the output back to the input for use in a closed loop system.

Form Factor
The ratio of RMS current to average current. This number is a measure of the current ripple in a SCR or other switch-mode type of drive. Since motor heating is a function of RMS current while motor torque is a function of average current, a form factor greater than 1.00 means some fraction of motor current is producing heat but not torque.

Four Quadrant
Refers to a motion system which can operate in all four quadrants; i.e., velocity in either direction and torque in either direction. This means that the motor can accelerate, run, and decelerate in either direction.

Friction
A resistance to motion caused by contact with a surface. Friction can be constant with varying speed (Coulomb friction) or proportional to speed (viscous friction).

Hall Sensor
A feedback device which is used in a brushless servo system to provide information for the amplifier to electronically commutate the motor. The device uses a magnetized wheel and hall effect sensors to generate the commutation signals.

Holding Torque
Sometimes called static torque, holding torque specifies the maximum external torque that can be applied to a stopped, energized motor without causing the rotor to rotate. Generally used as a figure of merit when comparing motors.

Horsepower
A Unit of measure of Power. One horsepower is equal to 746 watts. The measurement of Rotatry power must take speed and torque into account. Horsepower is a measure of a motor's torque and speed capability.

Formula: HP = Torque (lb-in.) x Speed (RPM)/63,025
HP = Torque (lb-ft.) x Speed (RPM)/5,252
HP = Volts x Amps x Efficiency/746

Inductance (L) (mH - millihenries line-to-line)
The electrical equivalent to mechanical inertia; that is, the property of a circuit, which has a tendency to resist current flow when no current is flowing, and when current is flowing has a tendency to maintain that current flow.

Inductance (mutual)
Mutual inductance is the property that exists between two current carrying conductors or coils when magnetic lines of force from one link with those of the other.

Inertia
The property of an object to resist change in velocity unless acted upon by an outside force. Higher inertia objects require larger torques to accelerate and decelerate. Inertia is dependent upon the mass and shape of the object.

Inertial Match
For most efficient operation, the system coupling ratio should be selected so that the reflected inertia of the load is equal to the rotor inertia of the motor.

Open-loop
A system in which there is no feedback. Motor motion is expected to faithfully follow the input command. Stepping motor systems are an example of open-loop control.

Overload Capacity
The ability of a drive to withstand currents above its continuous rating. It is defined by NEMA as 150% of the rated full-load current for "standard industrial DC motors" for one minute.

Peak torque (Tpk) (lb-in.)
The maximum torque a brushless motor can deliver for short periods of time. Operating permanent magnet motors above the maximum torque value can cause demagnetization of the rare-earth magnets. This is an irreversible effect that will alter the motor characteristics and degrade performance. This is also known as peak current. Not to be confused with system peak torque, which is often determined by amplifier peak current limitations, where peak current is typically two times continuous current.

Poles
Refers to the number of magnetic poles arranged on the rotor of the brushless motor. Unlike an AC motor, the number of poles has no direct relationship to the base speed of the motor.

Power
The rate at which work is done. In motion control, power is equal to torque multiplied by speed.
Power (watts) = force x distance/time. Power= voltage x current

Power Factor
Ratio of true power (kW) to apparent power (kVA).

Pulse Rate
The frequency of the step pulses applied to a step motor driver. The pulse rate, multiplied by the resolution of the motor/driver combination (in steps per revolution), yields the rotational speed in revolutions per second.

Pulse Width Modulation (PWM)
Pulse width modulation (PWM), describes a switch-mode (as opposed to linear) control technique used in amplifiers and drivers to control motor voltage and current.

Regeneration
The action during motor braking, in which the motor acts as a generator and takes kinetic energy from the load, converts it to electrical energy, and returns it to the amplifier.

Repeatability
The degree to which a parameter such as position or velocity can be duplicated.

Resolution
The smallest increment into which a parameter can be broken down. For example, a 1000 line encoder has a resolution of 1/1000 of a revolution.

Resonance
Oscillatory behavior caused by mechanical or electromechanical harmonics and limitations.

Ringing
Oscillation of a system following a sudden change in state.

RMS Current - Root Mean Square Current
In an intermittent duty cycle application, the RMS current is equal to the value of steady state current which would produce the equivalent motor heating over a period of time.

RMS Torque - Root Mean Square Torque
In an intermittent duty cycle application, the RMS torque is equal to the value of steady state torque which would produce the equivalent motor heating over a period of time.

Rotor
The moving part of the motor, consisting of the shaft and magnets. These magnets are analogous to the field winding of a brush-type DC motor.

Settling Time
The time required for a parameter to stop oscillating or ringing and reach its final value.

Speed
Describes the linear or rotational velocity of a motor or other object in motion.

Stall Torque
The amount of torque developed with voltage applied and shaft locked, or not rotating. Also known as locked-rotor torque.

Stator
The non-moving part of the motor. Specifically, it is the iron core with the wire winding in it that is pressed into the frame shell. The winding pattern determines the voltage constant of the motor.

Stiffness
The ability to resist movement induced by an applied torque. Stiffness is often specified as a torque displacement curve, indicating the amount a motor shaft will rotate upon application of a known external force when stopped.

Torque
A measure of angular force which produces rotational motion. This force is defined by a linear force multiplied by a radius; e.g. lb-in. Formula: Torque (lb-ft.) = 5,250 x HP/RPM

Torque Constant (KT = lb-ft./A)
An expression of the relationship between input current and output torque. For each ampere of current, a fixed amount of torque is produced.

NOTE: Torque constants ARE NOT linear over the operating range of a motor. They apply best at ~75% of no load maximum speed or where the peak and continuous torque curves meet.

Torque-to-inertia Ratio
Defined as the motor's holding torque divided by the inertia of its rotor. The higher the ratio, the higher a motor's maximum acceleration capability will be.

Velocity
The change in position as a function of time. Velocity has both a magnitude and sign.

Voltage Constant (KE) (V/kRPM peak, line-to-line)
May also be termed back-EMF constant. When a motor is operated, it generates a voltage proportional to speed, but opposing the applied voltage. The shape of the voltage waveform depends upon the specific motor design. For example, in a brushless motor, the wave shape may be trapezoidal or sinusoidal in nature.

Code Execution and Boot-Up

The Controller can execute both downloaded program code and incoming serial port commands at the same time. Priority is given to Serial Communications to allow Host level control and override of downloaded code if required. With the exception of program flow commands, just about all Animatics SmartMotor commands may be run via serial port.

The Controller executes its downloaded program within a 500 millisecond window of power up. This window allows the user to abort program execution via serial port if necessary.

Serial Data parsing capabilities allows the controller to communicate with non-Animatics products such as Barcode Readers, Serial Encoders, Light Curtains, etc.

The Controller can therefore act at Master Controller for an entire machine.

Basic Program Flow capabilities:

The program language is similar to C or Basic. It is a Text Based language with the ability to handle up to 1000 subroutines. Decision Making Flow control allows for a broad range capability in machine control.

IF ELSEIF ELSE ENDIF structure:

```
IF a<b
    PRINT("a is less than b",#13)
ELSEIF q==123
    PRINT("q equals 123",#13)
ELSE 'if no condition above was true
    PRINT("nothing above was true",#13)
ENDIF
```

WHILE LOOP structure

Example of a loop that will execute 10 times:

```
a=0
WHILE a<10
    a=a+1
LOOP
PRINT("loop code executed 10 times",#13)
```

GOTO, GOSUB structure:

```
C1
IF a>b
    GOTO1
ELSEIF b>c
    GOSUB5
ENDIF
    GOTO6
C5
PRINT("b is greater than c",#13)
RETURN
C6
END
```

SWITCH CASE BREAK structure:

```
SWITCH a
    CASE 1
       PRINT("a=1",#13)
    BREAK
    CASE 2
       PRINT("a=2",#13)
    BREAK
    DEFAULT
       PRINT("a does not equal 1 or 2",#13)
    BREAK
ENDS
```

Data Logging and Error Handling:

The Controller can have a fault interrupt handler store status bits in non-volatile memory, then with another subroutine, recall the logged totals even in the event of power loss:

```
C1 'Interrupt Fault Routine (applies to PLS firmware ONLY)
       aa=aa+Be   'Trap Pos. Error Bit
       bb=bb+Bh   'Trap Over Temp Bit
       cc=cc+Ba   'Trap Over Current Bit
       dd=dd+Bo   'Trap Motor-Off Bit
       EPTR=100   'Set EPROM Pointer
       VST(aa,4) 'Store 4 consecutive variables
RETURNF
```

```
C3      'Get latest Status Bit totals
       EPTR=100
       VLD (aa,4)        'Load 4 consecutive variables
       PRINT("Error Bit Totals",#13)
       PRINT("Be:",aa," (Position Error)",#13)
       PRINT("Bh:",bb," (Over Temperature)",#13
       PRINT("Ba:",cc," (Peak Over Current)",#13)
       PRINT("Bo:",dd," (Motor OFF)",#13)
RETURN
```

I/O Port Handling:

Each Controller has 7 User Definable I/O pins that can be assigned as General Input or Outputs.
Additionally they can be read as 10-bit analog inputs at any time.

The I/O pins are called Port Pins and are as follows:

Pin	Port	Additionally Assignable as:
1	A	Phase A Enc. Input, or Step (Pulse) Input
2	B	Phase B Enc. Input, or Direction Input
3	C	Positive Over Travel Limit
4	D	Negative Over Travel Limit
5	E	RS-485 A or AniLink Clock (I2C)
6	F	RS-485 B or AniLink Data (I2C)
7	G	Synchronize Input or “G” (GO) command

Each Controller Includes Dedicated Encoder Output Pins for ease of Master-Slave Connections between two controllers.

Mode Follow (Electronic Gearing) and

Mode-Step (Pulse and Direction) both allow the use of 24-bit resolution ratio of input count to motor slave count gearing.

Controller Addressing:

Up to 100 unique addresses per single RS-232 or RS-485 network are possible.

RS-232 is connected via Serial Daisy chain where the Transmit of one controller is connected to the Receive of the next. Each controller will ECHO out incoming data to downstream controller.

RS-485 meets the IEE standard allowing parallel connection to all controllers on the bus.

Commands may be sent individually proceeded by Controller Addresses or Globally to all controllers at once via global addressing.

Ethernet, DeviceNet, CAN Open and ProfiBus Gateway Options access the controllers via their secondary RS-485 Port. Please consult the Animatics Users Guide for full details.

F=# Function Command Overview

The F command value allows Enabling or Disabling of special firmware functions of the SmartMotor Processor and Drive Stage.

Syntax: F=value

The Value is a Binary Bit weighted value with each bit controlling a specific feature.

Bit Value Functions are as follows:

1	Decelerate to stop on limit switch input (as opposed to just turning off)
2 *	Invert Communication (Changes Shaft rotation)
4	Any Report commands transmit to Com 1 only. (Use with Extreme Caution)
8	Clear PID integral term at trajectory-end to avoid possible slow settling
16 *	Mode Cam positions are relative for each re-entry into CAM table (from either direction)
32 *	GOSUB1 is issued under motor fault condition C1 can not be called again prior to receiving a RETURNF
64 *	GOSUB2 is issued on user input G transition from high to low C2 can not be called again prior to receiving a RETURNI
128 *	Internal Slave Counter = base + dwell module while in CAM Mode
256 **	Set T.O.B. to be active for entire move profile
512 **	Suppress T.O.B. until Target Velocity has been reached
1024 **	Enables Port G to Index trigger latch function (only in SM2316D/DT-PLS2 and > = 4.93 firmware)

*** Note: Only Applies to >=v4.77 and higher, "plus"**

****Note:** Must specify 4.78T firmware

F Command is Binary Bit flag additive:

Example:

F=21 would break down to F=(16+4+1).

Motor would run CAM Mode relative, redirect print statements to port 1, and decelerate on limits collectively.

Warning: C1 has priority over C2. C1 can be activated when in C2.

The F value can be changed on-the-fly while in an Interrupt subroutine to change its effect.

An example would be turning off the G interrupt once in C2 to prevent any subsequent calls.

Modes of Operation:

MP	Set Controller for Position Mode, pending a G
MV	Set Controller for Velocity Mode, pending a G
MT	Immediately set controller to Torque Mode
MFx	Immediately set Controller to Mode-Follow (Electronic Gearing to follow External Encoder) where x = 1,2,4
MS	Immediately Set Controller to Step-Mode (Step and Direction Input)
MC	Initialize Mode Cam awaiting a G
MTB	Mode Torque Brake (Dynamically brake)
	Note: MTB applies to PLS firmware only.

Position Commands:

A	Value of absolute acceleration
A=*expression*	Set Acceleration for Position and Velocity Modes (unsigned 16-bit value)
V	Value of buffered requested velocity
V=*expression*	Set required Velocity for Position and Velocit Modes (Signed 32-bit value)
D	Value of buffered relative position, phase offset, and [Dwell (F=16, F=128)]
D=*expression*	Set Relative Distance for Relative Position Mode, (signed 32-bit value) Set Phase Offset Distance In Electronic Gearing, Set Dwell in Cam Mode (See F-Function Comands for more)
P	Value of buffered target position
P=*expression*	Set buffered target Position for Absolute Position Mode (signed 32-bit value)
G	Start buffered motion profile or trajectory; Initiate Mode Follow Ratio in Electronic Gearing Initiate Phase Offset Move in Electronic Gearing Initiate all buffered move profile values such as Velocity, Acceleration, etc.
TWAIT	Halt program command execution until trajectory completed
X	Decelerate to a stop using present buffered acceleration value
S	Decelerate to a stop using firmware fixed high rate of deceleration
I	Index Pulse Position of Internal Encoder at last point of capture
O=*expression*	Reset Origin in Position Register (to a signed 32-bit value)
E	Value of Maximum Allowable Following Error in Encoder Counts
E=*expression*	Set Maximum allowable Position Error (unsigned 0-300000 max)
AMPS	Value of the power limit
AMPS=*expression*	Set PWM Power limit, 0 to 1023 represents 0-100% allowable PWM
OFF	Turn off Drive Stage of SmartMotor™ servo
T	Value of Commanded Torque (Open-Loop Commanded PWM to Drive Stage)
T=*expression*	Set torque magnitude and direction, (signed values of -1023 to 1023)

External Encoder Motion Commands:

MF0 Reset secondary encoder counter to zero

MS0 Reset secondary encoder to zero

MFDIV Value of Mode Follow Ratio Divisor

MFDIV=*expression*
Set Ratio divisor value (16-bit signed value)

MFMUL Value of Mode Follow Ratio Multiplier

MFMUL=*expression*
Set Ratio Multiplier value (16-bit signed value)

MSR Calculate New Buffered Step Mode Ratio values from MFMUL and MFDIV, pending a G

MFR Calculate New Buffered Follow Mode Ratio values from MFMUL and MFDIV, pending a G

MCx Initialize Cam Mode awaiting a G, where x =2, 4, or 8 times result

CI Mode Cam Table Index Value, (present Cam table pointer)

BASE=*expression*
Cam Mode periodic encoder base where SIZE < BASE <= 32767

SIZE=*expression*
Number of Array Points in Cam Table for Cam Mode operation where 2 <= SIZE <= 100

CTR External Encoder Position Register Value

CTR=0 Set External Encoder Register to Zero

ENC0 Close Position Loop on Internal Encoder (Default State)

ENC1 Close Position Loop on External Encoder (Optional State)

Program Flow Structures:

Nesting program flow structure is permitted (6 levels deep)

IF *expression ...* Beginning of “IF” code block

ELSEIF *expression* Next “IF” test case, extended only if “IF” above is false

ELSE Remaining “IF” test case

ENDIF End of IF, ELSEIF, and ELSE code block

SWITCH *expression ...*
ENDS SWITCH code block (resultant value of expression stored in the variable zzz)

CASE *value* Individual SWITCH test case

BREAK Jump to exit of WHILE or SWITCH

DEFAULT If all SWITCH test cases false

ENDS End of SWITCH code block

WHILE *expression* WHILE code block

LOOP End of WHILE code block

RUN Executed the stored EEPROM program, from the beginning

! Suspend program execution until ANY Incoming Communications is received

RUN? Stop program executing at point of command until RUN command is received

BREAK Jump to exit of WHILE or SWITCH

GOSUBnnn Execute subroutine at statement label nnn, and then return to next statement

GOTOnnn Jump to program statement label nnn

C# Program Location Label for GOT and GOSUB calls, C0 to C999

RETURN Return subroutine to program address on the stack (just below GOSUB call)

WAIT=*expression* Suspend program execution for given number of PID cycles, ~4069cyles = 1sec

Z Perform Software CPU Reset of SmartMotor™

END Stop Program Code Execution

User Program EEPROM Read/Write Commands:

LOAD Receive and Store into EEPROM a compiled SmartMotor™ program file

UPLOAD Upload User Program to host terminal

UP Upload Compiled User Program and Header file to host terminal

RCKS Report Compiled User Program EEPROM checksum

Variable/Data Storage EEPROM Read/ Write Commands:

EPTR=*expression* Set user EEPROM memory pointer where n is 0 to 32255

VLD *(variable, number)*
Load contiguous user variables from user EEPROM number is the number of variables to be loaded

VST *(variable, number)*
Store contiguous user variables into user EEPROM, number is the number of variables to be stored

Variables/System-Variables:

@P Value of measured position

@PE Value of measured position error

@V Value of measured velocity

a thru **z** 32-bit Signed Integer value variables

aa thru **zz** 32-bit Signed Integer value variables, (shares memory location with array variables)

aaa thru **zzz** 32-bit Signed Integer value variables, (shares memory location with array variables)

ab[0] thru **ab[200]** 8-bit Signed Integer Array Variables, (shares memory location with aa-zz, and aaa-zzz)

aw[0] thru **aw[100]** 16-bit Signed Integer Array Variables, (shares memory location with aa-zz, and aaa-zzz)

al[0] thru **al[50]** 32-bit Signed Integer Array Variables, (shares memory location with aa- zz, and aaa-zzz)

System State Flags:

The follow binary values can be tested by IF and WHILE control flow expressions, or assigned to any variable. They may all be reported using RB{bit} commands and are ideal for Fault Detection and control when operating via Serial Communications.

RW Report Status Word (See Individual Status Bits Below)

Bt =1 if trajectory in progress,	Bit: 0, value: 1
Br =1 if Positive Travel Limit Exceeded	Bit: 1, value: 2
Bl =1 if negative limit crash occurred	Bit: 2, value: 4
Bi =1 if new index report available	Bit: 3, value: 8
Bw =1 if Wrap Around occurred	Bit: 4, value: 16
Be =1 if position error occurred	Bit: 5, value: 32
Bh =1 if Exceeded Thermal Limit	Bit: 6, value: 64
Bo =1 if Drive Stage is OFF	Bit: 7, value: 128
Bx =1 if Drive Stage is OFF	Bit: 8, value: 256
Bp =1 if on Positive Travel Limit,	Bit: 9, value: 512
Bm =1 if on Negative Travel Limit ,	Bit:10, value:1024
Bd =1 if math overflow occurred,	Bit: 11 value:2048
Bu =1 if user array index error occurred,	Bit: 12, value:4096
Bs =1 if syntax error occurred,	Bit: 13, value:8192
Ba =1 if over current occurred,	Bit: 14, value:16384
Bk =1 if EEPROM I/O error occurred,	Bit :15, value:32768

Other Status Bit Flags:

Bb =1 if comm parity error occurred

Bc =1 if comm buffer overflow occurred

Bf =1 if comm framing error occurred

By =1 if step direction change overrun occurred (V4.40 only)

Reset System State Flag:

Za	Reset (Ba) over-amps flag bit
Zb	Reset (Bb) comm parity flag bit
Zc	Reset (Bc) comm overflow flag bit
Zd	Reset (Bd) math overflow flag bit
Ze	Reset (Be) Position Error flag bit
Zf	Reset (Bf) comm framing flag bit
Zl	Reset (Bl) negative limit crash flag bit
Zr	Reset (Br) positive limit crash flag bit
Zs	Reset (Bs) syntax error flag bit
Zu	Reset (Bu) array index error flag bit
Zw	Reset (Bw) position wrap flag bit
Zy	Reset (By) step dir bit (Ver. 4.40 only)
ZS	Reset all reset-able system flags

Report to Host Commands:

R{user variable} report user variable to host
User variable is a thru z, aa thru zz, aaa thru zzz, ab[0] thru ab[200], aw[0] thru aw[100], or al[0]

R{X} report to host various commands (where {x} can be position comands, variables, system state flags, communication commands, etc.)

Motor Over Travel Limit Commands:

UCP	Assign pin C to positive limit switch input, (default state)
	Note: Disable with either or UCO or UCI
UDM	Assign pin D as negative limit switch input, (default state)
	Note: Disable with either or UDO or UDI
	The following apply to non-PLS firmware only:
SLD	Disable software limits
	(always disable prior to changing values below)
SLP=*expression*	Assign value in encoder counts to Programmable
	Positive Software Travel Limit
SLN=*expression*	Assign value in encoder counts to Programmable
	Negative Software Travel Limit
SLE	Enable software limits

Motor I/O Commands:

RU	Report all I/O states A-G in one 7 bit number
UG	Assign pin G to synchronous “GO” (default State)
U{pin}O	Assign pin to be an output
U{pin}=*expression*	Set pin output latch to 0 or 1
	where 0 is zero volts, and 1 is 5VDC
U{pin}I	Assign pin to be a general input
var=U{pin}I	Assign digital value of pin to variable (returns a 0 or 1)
var=U{pins}A	Assign 10-bit analog value of a pin to a variable

In all above cases:

{pin} is **A, B, C, D, E, F,** or **G**

exp. is **0** or **1**

var is any variable **a** thru **z**, **aa** thru **zz**, **aaa** thru **zzz**, **ab[0]** thru **ab[200]**, **aw[0]** thru **aw[100]**, or **al[0]** thru **al[100]**

Examples: UAI, UBO, c=UDI, UE=0, f=UGA

AniLink™ I/O Commands:

AIN{port}{input} value of 8-bit analog input

AOUT{port},{exp.8} output byte to analog port

DIN{port}{channel } AniLink digital input byte

DOUT{port}{channel},{exp.8} output digital byte value to AniLink

{port} is A, B, C, D, E, F, G, or H

{input} is 1, 2, 3, or 4

{channel} is 0 thru 63

{exp.8} i is 8 bit value: 0 thru 255

Brake Commands:

BRKENG Engage the brake (requires hardware brake)

BRKRLS Release the brake (requires hardware brake)

BRKSRV Engage break whenever servo off (requires hardware brake)

BRKTRJ Engage break when trajectory is not running (requires hardware brake)

BRKC* Re-direct brake control from internal brake pin to Port C
(Ver. 4.15b or higher firmware only)
UCO must be issued prior to this command
Automatic Functionality follows BRKTRJ or BRKSRV commands as listed above

BRKG* Re-direct brake control from internal brake pin to Port G
(Ver. 4.15b or higher firmware only)
UGO must be issued prior to this command
Automatic Functionality follows BRKTRJ or BRKSRV commands as listed above

BRKI* Redirect brake control to internal brake control pin (Default state)
(Ver. 4.15b or higher firmware only)

*Note: Not available with 440c firmware (i.e. SM2315D and SM2315DT)

PID Filter Commands:

PIDx Set PID update rate where x=1, 2, 4, or 8 (default is PID1)

KA Value of buffered acceleration feed forward gain coefficient

KA=*expression* Set buffered acceleration feed forward gain coefficient

KD Value of buffered derivative gain coefficient

KD=*expression* Set buffered PID derivative gain coefficient

KG Value of buffered PID constant coefficient

KG=*expression* Set buffered PID constant coefficient

KI Value of buffered integral gain coefficient

KI=*expression* Set buffered PID integral gain coefficient

KL Value of buffered PID integral term contribution limit

KL=*expression* Set buffered PID integral limit

KP Value of buffered PID proportional gain coefficient

KP=*expression* Set buffered PID proportional gain coefficient

KS Value of buffered KS differential sample rate coefficient

KS=*expression* Set buffered PID differential sample rate

KV Value of buffered velocity feed forward gain coefficient

KV=*expression* Set buffered PID velocity feed forward gain

F Apply buffered filter coefficients to PID calculation

Communication Commands:

ADDR=exp set motor address between 0 and 99

BAUDX Set baud rate to (x=2400, 4800, 9600, 19200, 38400 bps)

SADDR*address* Set SmartMotor™ address, were address = 0 to 115

ECHO Set Channel 0 (Main RS-232 Port) to Echo all received data to the transmit line

ECHO_OFF Turn off Echo function above, Default state is ECHO_OFF

SILENT Prohibit outgoing messages onto Channel 0, (RS-232) originating from within user program

SILENT1 Prohibit outgoing messages onto Channel 1, (RS-485) originating from within user program

SLEEP Prohibit SmartMotor executing received Channel 0 commands except WAKE

SLEEP1 Prohibit SmartMotor executing received Channel 1 commands except WAKE1

TALK Permit outgoing messages originating from within user program to Channel 0 (RS-232)

TALK1 Permit outgoing messages originating from within user program to Channel 1 (RS-485)

WAKE Permit any Received Commands on Channel 0 (RS-232) to be executed

WAKE1 Permit any Received Commands on Channel 1 (RS-232) to be executed

OCHN (type,comm,parity,bit rate,stop bits,data bits, specification)

Open a communications channel where:

type is RS2 or RS4

comm is either primary channel 0 or secondary channel 1

baudrate 2400, 4800, 9600, 19200, or 38400 (bps)

data bits is 8

stop bits is 1

specification is C (for command) or D (for data)

PRINT( ) Print to Com Ch. 0 (RS-232 main channel)

PRINT1( ) Print to Com Ch 1 (RS-485)

PRINT{port}( ) Print to AniLink™ port choice of A thru H

Note: See Animatics User's Guide for more information on PRINT commands

GETCHR Capture next character from Com Ch.0 input buffer

GETCHR1 Capture next character from Com Ch.1 input buffer

LEN Number of characters presently in Com Ch.0 buffer

LEN1 Number of characters presently in Com Ch.1 buffer

Note: See Animatics User's Guide for more information on PRINT commands

Miscellaneous Commands:

CLK Value of SmartMotor™ clock

CLK=*expression* Set/Reset value of SmartMotor™ clock

TEMP Value of Slave processor unit temperature in degrees C.
(It must be assigned to a variable to be reported.)

UIA Value of motor current in 100ths of Amps
(It must be assigned to a variable to be reported)

UJA Value of motor DC bus Voltage in 10ths of Volts.
(It must be assigned to a variable to be reported)

Animatics Corporation and subsidiaries, collectively “Animatics”, assembles and/or manufactures products and systems which are components of machines and final systems that are made by other companies. As such, Animatics considers that it is exempt from the standards applicable to such final machine and systems builders. Nonetheless, as an accommodation only, Animatics has used standards as outlined herein as a part of its quality assurance program.

Animatics Corporation and subsidiaries product and systems designs and engineering is done to standards such as CE, EU, DIN, and the like. Such standards include Applied Harmonized Standards and Applied National Standards and electrical (under 50V), mechanical and machine design standards. The following are some of the standards applicable to our products and systems known as the SmartMotor™, Servida™, OEM Dynamics™, and private labeled rotary and linear systems and accessories.

ELECTRICAL

EMC

EN 50081-1:1992, *Electromagnetic compatibility-Generic emission standard*

CISPR 22:1987/ EN55022:1987, Class A, *Limits and methods of measurement of radio interference characteristics of information technology equipment.*

EN 50082-1:1994, *Electromagnetic compatibility- Generic immunity standard*

EN 61000-4-2, *Electrostatic discharge immunity test*

EN 61000-4-3, *Radiated, radio frequency electro-magnetic field immunity test*

EN 61000-4-4, *Electrical fast transient/burst immunity test*

EN 61010-1:1993 *Safety requirements for electrical equipment for measurement, control, and Laboratory use.*

MACHINERY (including linear products and systems such as actuators, slides, stages, etc.)

According to EC Directive on Machinery 98/37/EG
According to EC Directive on Machinery EMC 2004/108/EC
Applied Harmonized Standards

EN ISO 12100-1:2003-11

Safety of machinery-Basic concepts, general principles for design
Part 1: Basic terminology, methodology
Part 2: Technical principles

Applied National Standards and technical specifications, especially:

World sourced components are made to:
DIN, ABEC, ISO, CE and so called UL applicable standards such as:

UR 1004
EN 12020-2:2001;
ISO 3408-3-1992; ISO-7380-A; ISO230-2,
DIN912A2; DIN7984-A2;
ASME Y14.5M-1994; ASME Y14.41-2003.

Comment: 1) Products can be made to comply with CE Medical Device Directive S2-93, TUV mark applications, and more. More information on conformity standards may be found at www.animatics.com/literature. 2). Animatics uses or has used independent testing laboratories such as a) Underwriters Laboratories Inc. (“UL”), b) Bay Area Compliance Labs (“BACL”) and other U.S. and European companies to supplement its own testing capabilities. For more information go to http://animatics.com/web/literature.html

January 14, 2009

James V. Hawkins

President, Animatics Corporation

Warranty Statement

Animatics warrants to Customer that Products purchased hereunder will conform to the applicable manufacturer's specifications for such Products and that any value-added work performed by Animatics on such Products will conform to applicable Customer's specifications relating to such work for a period of 1-2 years from the date of purchase. Animatics makes no other warranty, express or implied, with respect to the Products.

IN PARTICULAR, ANIMATICS MAKES NO WARRANTY RESPECTING THE MERCHANTABILITY OF THE PRODUCTS OR THEIR SUITABILITY OR FITNESS FOR ANY PARTICULAR PURPOSE OR USE OR RESPECTING INFRINGEMENT. However, Animatics will transfer to Customer whatever transferable warranties and indemnities Animatics receives from the manufacturer of whatever transferable warranties and indemnities Animatics receives from the manufacturer of the Products. With respect to value-added work by Animatics which does not meet applicable Customer's specifications, Animatics' liability is limited (at Animatics election) to (1) refund of Customer's purchase price for such Products (without interest), (2) repair of such Products, or (3) replacement of such Products; provided, however, that such Products must be returned to Animatics, along with acceptable evidence of purchase, within twenty (20) days from date of delivery, transportation charges prepaid.

CUSTOMER SHALL NOT IN ANY EVENT BE ENTITLED TO, AND ANIMATICS SHALL NOT BE LIABLE FOR INDIRECT, SPECIAL, INCIDENTAL OR CONSEQUENTIAL DAMAGES OF ANY NATURE INCLUDING, WITHOUT BEING LIMITED TO, LOSS OF PROFIT, PROMOTIONAL OR MANUFACTURING EXPENSES, OVERHEAD, INJURY TO REPUTATION OR LOSS OF CUSTOMERS. CUSTOMER'S RECOVERY FROM ANIMATICS FOR ANY CLAIM SHALL NOT EXCEED CUSTOMER'S PURCHASE PRICE FOR THE PRODUCTS IRRESPECTIVE OF THE NATURE OF THE CLAIM WHETHER IN CONTRACT, TORT WARRANTY, OR OTHERWISE.

USE OF PRODUCTS IN LIFE SUPPORT AND NUCLEAR APPLICATIONS.

Products sold by Animatics are not designed for use in life support or nuclear applications. Animatics' customers using or selling Products for use in life support or nuclear applications do so at their own risk, agree that Animatics and the manufacturer of the Products are not liable, in whole or in part, for any claim or damage arising from such use, and agree to fully indemnify, defend and hold harmless Animatics and the manufacturer of the Products from and against any and all claims, damages, loss, cost, expense or liability arising out of or in connection with the use or performance of Products in life support or nuclear applications.

All integrated motor products made by Animatics are covered by patent number 5,912,541.

Patents are in progress worldwide on all Harmonic Drive Products and all rights are reserved as to OEM Dynamics linear products and systems.

Actuators and Harmonic Linear Drive units have a 1 year warranty

SmartMotors have a 2 year warranty

ANIMATICS®

The Animatics name and logo, the Animatics logo are registered trademarks of Animatics Corporation incorporated in the U.S.A. and other countries. Animatics™, OEMDynamics™, AniLink™, Animatics Legend Series™, Animatics OEM Series™, Harmonic Linear Drive™, Integrated SmartMotor™, JenCNC™, RTC 1000™, RTC 3000™, RTC 4000™, SmartActuator™, SmartBox™, SmartBoxBCD™, SmartMachine Systems™, SmartMotor™, Smart Select™, Smart Select Interface™, Smart Select Software™, SmartTechnologies™, SMIEngine™, SMNC™, and Servida™ are trademarks of Animatics Corporation
incorporated in the U.S.A.

All other trademarks mentioned herein are the property of their respective companies.

Information subject to change. © 2009, Animatics Corporation, Inc. All rights reserved. Printed in the U.S.A.

Index

Benefits of Integrated Design 6, 7, 8, 9

Brakes
Brake Options 53
CAD drawings 54, 60

Cables
Introduction to Connectivity 61
RS-232 . . . . . .64..68
Isolated RS-485 . . . . . .69, 70
DaisyChain 65
Multi Drop 67, 69
Selection Guide 62, 63
I/O Cables 72, 73
USB 71
24VDC Converter Cable 73

Communications
Dual Port Master 10

Communications Adapters
RS-232 to RS485 71
RS-232 to RS-485 Isolated 70, 69
USB to RS-232/485 71

Connectors
Cable Connectors 74
Motor Connections . . . . . Centerfold

Converter
See Communications adapters
5V to 24V Logic 73, 76

Development Kit 74

Expanded I/O
Digital I/O Expansion 79, 80
Analog I/O Expansion 81

FAQ Section
I/O Related FAQ 127
EEPROM FAQ 127
Power Supplies 128
Back EMF 128
Hard Stop Crashes 129
Communications 129

Gearheads
Overview 95
Ratio Matching 94
Standard (OEM) 102, 107
High Performance 96, 101
Right Angle 108, 110

Industrial Bus Options
CANOpen 46
DeviceNet 46
Ethernet 47
ProfiBus 47

Modes of Operation . . . . . 11, Centerfold

Motion Sizing Equations 130, 131

Peripherals
Overview 75
LCD Displays 81
Communicaitons Hub 78
24VDC Logic Converter 76
Breakout Board 77
Digital I/O Expansion 79, 80
Analog I/O Expansion 81

Power Curves
Explained 15
Motor Power Curves . . . . . .19..45

Power Supplies
Overview 84
Unregulated 85, 90
Switch Mode (Regulated) 86, 88, 90

Programming Syntax 132, 136

Servo Motor Specifications
17 Frame 18, 19
23 Frame 20, 33
34 Frame 33, 45

Shunts
Overview 91
Open Frame 92
Enclosed 93

Software
Introduction 111
SMI SmartMotor Interface 112
SSI Smart Select Interface 114
SMNC 116
JenCNC 118

Table of Contents 2, 3

Test/Simulation 82, 83

Torque Curves
Effects of Temperature 15
Effects of Voltage 15
Limits of 15
Motor Torque Curves 19, 45
Operating Regions 16, 17
Power Curves 16

Warnings Section 125

Notice: All SmartMotors™, Actuator and Product specifications are subject to change without notice.

Description	Part Number	Page
Breakout Board, Motor I/O, DB-15, Relay socketed	DINIO7	77
Cable, for Enclosed Shunt to Enclosed Power Supply	CBLDC1	93
Cable, I/O, 24VDC converted Logic, Isolated	CBLIO-ISO-xM series	73
Cable, I/O, Direct Connection, Flying Leads	CBLIO5V series	72
Cable, Power and Communications, Connectorized	CBLSM1-3M	64
Cable, Power and Communications, Daisy chain	CBLSMADD-series	65
Cable, Power and Communications, Demo/Testing	CBLSM1-DEMO	66
Cable, Power and Communications, Flying Lead	CBLPWRCOM2-xM	68
Cable, Power and Communications, Isolated RS485	RS485-ISO	70
Cable, Power and Communications, Multi-Drop RS232	CBLSM1-X-Y-Z series	67
Cable, Power and Communications, Multi-Drop RS485	CBLSM2-X-Y-Z series	69
Cable, Power, AC, for PWR116V	CBLAC4	90
Communications Adapter, RS-232 to RS-485	RS232485T	71
Communications Adapter, USB to RS232/485	KITUSB232485	71
Communications Hub, RS232 Isolated, 8 channel	DIN-RS232	78
Connector Hood, DB-15 size, EMI/Magnetic Shielded	CN149	74
Connector Hood, DB-9 size, EMI/Magnetic Shielded	CN161	74
Connector Pin, Female, Crimp type, 20-24AWG, for CN121V	P121	74
Connector Pin, Male, Crimp type, 16-18AWG, for CN119	P102	74
Connector Pin, Male, Crimp type, 20-248AWG, for CN132	P104	74
Connector Socket, Female, solder cup, 14AWG, for CN141	CN142	74
Connector, 4-pin, DC Power	CN119	74
Connector, 7W2, Female	CN141	74
Connector, DB-15, Male	CN132	74
Connector, DB-9, Female	CN121V	74
Connector, Molex, 4-pin, RS485 communications	KITDC3	74
Connector, Shroud/Hood, for CN119	CN114	74
Expanded I/O, 5VTTL, 8-bit Port Adapter	DIO100	80
Expanded I/O, Analog, 0-10VDC, 8-bit, 4 input, 1 output	AIO-110	81
Expanded I/O, Analog, 0-5VDC, 8-bit, 4 input, 1 output	AIO-100	81
Expanded I/O, Opto Board Adapter, 16 channel	OPTO1	80
Expanded I/O, RS-485 based, 8 in, 8 out, 24V isolated	DINIO-RS485	79
Gearheads, NEMA 17 mount, Economy, OEM Series	GH17SP### series	102
Gearheads, NEMA 17 mount, High Performance, Low Backlash	GH17P## series	96
Gearheads, NEMA 17 mount, Right Angle	GH17RAP### series	108
Gearheads, NEMA 23 mount, Economy, OEM Series	GH23SP### series	104
Gearheads, NEMA 23 mount, High Performance, Low Backlash	GH23P## series	98
Gearheads, NEMA 23 mount, Right Angle	GH23RAP### series	109
Gearheads, NEMA 34 mount, Economy, OEM Series	GH34SP### series	106
Gearheads, NEMA 34 mount, High Performance, Low Backlash	GH34P## series	100
Gearheads, NEMA 34 mount, Right Angle	GH34RAP### series	110
I/O Adapter, 16channel, Isolated 5V to 24V Logic	OPTO2	76
Interface Box, Test/Demonstration, w/5 Switches and 2 LED's	SMARTBOXBCD	83
Interface Box, Test/Demonstration, w/Encoder, Potentiometer	SMARTBOX	82
LCD Display, 2x20 character, AniLink Based	LCD2X20	81
LCD Display, 4x20 character, AniLink Based	LCD4X20	81
Power Supply, 1500Watt, 48VDC, 32Amps, Switch Mode	PFC1500W-48	88
Power Supply, 250Watt, 24VDC, 8 Amps, Unregulated, enclosed	PS24V8AG-110	90
Power Supply, 250Watt, 42VDC, 6 Amps, Unregulated, enclosed	PS42V6AG-110	90
Power Supply, 500Watt, 48VDC, 10Amps, Switch Mode	PFC500W-48	86
Power Supply, 60Watt, 24VDC, 2.1Amps, Laptop style, Switch Mode	PWR116V	90
Power Supply, 680Watt, 42VDC, 20Amps, Unregulated, Open Frame	PS42V20A series	85
Shunt, DC, 100Watt, 49.5VDC trip Point, Enclosed	SHUNT42V100W	93
Shunt, DC, 100Watt, 49.5VDC trip Point, Open Frame	SHUNT42V100W-OF	92
Shunt, DC, 200Watt, 49.5VDC trip Point, Enclosed	SHUNT42V200W	93
Shunt, DC, 200Watt, 49.5VDC trip Point, Open Frame	SHUNT42V200W-OF	92
SmartMotor , 17 Frame, 145 Watt	SM1720D-PLS2	18
SmartMotor , 23 Frame, 181 Watt	SM2316D-PLS2	20
SmartMotor , 23 Frame, 186 Watt	SM2337DT-PLS2	26
SmartMotor , 23 Frame, 191 Watt	SM2337D-PLS2	24
SmartMotor , 23 Frame, 204 Watt	SM2316DT-PLS2	22
SmartMotor , 23 Frame, 220 Watt	SM2330D-PLS2	30
SmartMotor , 23 Frame, 226 Watt	SM2320D-PLS2	28
SmartMotor , 23 Frame, 253 Watt	SM2340D-PLS2	32
SmartMotor , 34 Frame, 235 Watt	SM3416D-PLS2	34
SmartMotor , 34 Frame, 334 Watt	SM3420D-PLS2	38
SmartMotor , 34 Frame, 400 Watt	SM3430D-PLS2	40
SmartMotor , 34 Frame, 438 Watt	SM3440D-PLS2	42
SmartMotor , 34 Frame, 527 Watt	SM3450D-PLS2	44
SmartMotor , 34 Frame, 615 Watt	SM3416DT-PLS2	36
Software, G-Code Interface, 5 Axis Configurable, Graphic real time	JenCNC	118
Software, G-Code Interface, 6 axis Configurable	SMNC	116
Software, SmartMotor Interface, standard development software	SMI2	112
Software, SmartSelect Interface, motor configuration setup software	SSI	114
Software, SME Engine, dll toolkit for programmers	SMIEngine	115
Starter/Development Kit	SMDEVPACK-D	74

Description	Part Number	Page
AIO-100	Expanded I/O, Analog, 0-5VDC, 8-bit, 4 input, 1 output	81
AIO-110	Expanded I/O, Analog, 0-10VDC, 8-bit, 4 input, 1 output	81
CBLAC4	Cable, Power, AC, for PWR116V	90
CBLDC1	Cable, for Enclosed Shunt to Enclosed Power Supply	93
CBLIO5V series	Cable, I/O, Direct Connection, Flying Leads	72
CBLIO-ISO-xM series	Cable, I/O, 24VDC converted Logic, Isolated	73
CBLPWRCOM2-xM	Cable, Power and Communications, Flying Lead	68
CBLSM1-3M	Cable, Power and Communications, Connectorized	64
CBLSM1-DEMO	Cable, Power and Communications, Demo/Testing	66
CBLSM1-X-Y-Z series	Cable, Power and Communications, Multi-Drop RS232	67
CBLSM2-X-Y-Z series	Cable, Power and Communications, Multi-Drop RS485	69
CBLSMADD-series	Cable, Power and Communications, Daisy chain	65
CN114	Connector, Shroud/Hood, for CN119	74
CN119	Connector, 4-pin, DC Power	74
CN121V	Connector, DB-9, Female	74
CN132	Connector, DB-15, Male	74
CN141	Connector, 7W2, Female	74
CN142	Connector Socket, Female, solder cup, 14AWG, for CN141	74
CN149	Connector Hood, DB-15 size, EMI/Magnetic Shielded	74
CN161	Connector Hood, DB-9 size, EMI/Magnetic Shielded	74
DINIO7	Breakout Board, Motor I/O, DB-15, Relay socketed	77
DINIO-RS485	Expanded I/O, RS-485 based, 8 in, 8 out, 24V isolated	79
DIN-RS232	Communications Hub, RS232 Isolated, 8 channel	78
DIO100	Expanded I/O, 5VTTL, 8-bit Port Adapter	80
GH17P## series	Gearheads, NEMA 17 mount, High Performance, Low Backlash	96
GH17RAP### series	Gearheads, NEMA 17 mount, Right Angle	108
GH17SP### series	Gearheads, NEMA 17 mount, Economy, OEM Series	102
GH23P## series	Gearheads, NEMA 23 mount, High Performance, Low Backlash	98
GH23RAP### series	Gearheads, NEMA 23 mount, Right Angle	109
GH23SP### series	Gearheads, NEMA 23 mount, Economy, OEM Series	104
GH34P## series	Gearheads, NEMA 34 mount, High Performance, Low Backlash	100
GH34RAP### series	Gearheads, NEMA 34 mount, Right Angle	110
GH34SP### series	Gearheads, NEMA 34 mount, Economy, OEM Series	106
JenCNC	Software, G-Code Interface, 5 Axis Configurable, Graphic real time	118
KITDC3	Connector, Molex, 4-pin, RS485 communications	74
KITUSB232485	Communications Adapter, USB to RS232/485	71
LCD2X20	LCD Display, 2x20 character, AniLink Based	81
LCD4X20	LCD Display, 4x20 character, AniLink Based	81
OPTO1	Expanded I/O, Opto Board Adapter, 16 channel	80
OPTO2	I/O Adapter, 16channel, Isolated 5V to 24V Logic	76
P102	Connector Pin, Male, Crimp type, 16-18AWG, for CN119	74
P104	Connector Pin, Male, Crimp type, 20-248AWG, for CN132	74
P121	Connector Pin, Female, Crimp type, 20-24AWG, for CN121V	74
PFC1500W-48	Power Supply, 1500Watt, 48VDC, 32Amps, Switch Mode	88
PFC500W-48	Power Supply, 500Watt, 48VDC, 10Amps, Switch Mode	86
PS24V8AG-110	Power Supply, 250Watt, 24VDC, 8 Amps, Unregulated, enclosed	90
PS42V20A series	Power Supply, 680Watt, 42VDC, 20Amps, Unregulated, Open Frame	85
PS42V6AG-110	Power Supply, 250Watt, 42VDC, 6 Amps, Unregulated, enclosed	90
PWR116V	Power Supply, 60Watt, 24VDC, 2.1Amps, Laptop style, Switch Mode	90
RS232485T	Communications Adapter, RS-232 to RS-485	71
RS485-ISO	Cable, Power and Communications, Isolated RS485	70
SHUNT42V100W	Shunt, DC, 100Watt, 49.5VDC trip Point, Enclosed	93
SHUNT42V100W-OF	Shunt, DC, 100Watt, 49.5VDC trip Point, Open Frame	92
SHUNT42V200W	Shunt, DC, 200Watt, 49.5VDC trip Point, Enclosed	93
SHUNT42V200W-OF	Shunt, DC, 200Watt, 49.5VDC trip Point, Open Frame	92
SM1720D-PLS2	SmartMotor , 17 Frame, 145 Watt	18
SM2316D-PLS2	SmartMotor , 23 Frame, 181 Watt	20
SM2316DT-PLS2	SmartMotor , 23 Frame, 204 Watt	22
SM2320D-PLS2	SmartMotor , 23 Frame, 226 Watt	28
SM2330D-PLS2	SmartMotor , 23 Frame, 220 Watt	30
SM2337D-PLS2	SmartMotor , 23 Frame, 191 Watt	24
SM2337DT-PLS2	SmartMotor , 23 Frame, 186 Watt	26
SM2340D-PLS2	SmartMotor , 23 Frame, 253 Watt	32
SM3416D-PLS2	SmartMotor , 34 Frame, 235 Watt	34
SM3416DT-PLS2	SmartMotor , 34 Frame, 615 Watt	36
SM3420D-PLS2	SmartMotor , 34 Frame, 334 Watt	38
SM3430D-PLS2	SmartMotor , 34 Frame, 400 Watt	40
SM3440D-PLS2	SmartMotor , 34 Frame, 438 Watt	42
SM3450D-PLS2	SmartMotor , 34 Frame, 527 Watt	44
SMARTBOX	Interface Box, Test/Demonstration, w/Encoder, Potentiometer	82
SMARTBOXBCD	Interface Box, Test/Demonstration, w/5 Switches and 2 LED's	83
SMDEVPACK-D	Starter/Development Kit	74
SMI2	Software, SmartMotor Interface, standard development software	112
SMIEngine	Software, SME Engine, dll toolkit for programmers	115
SMNC	Software, G-Code Interface, 6 axis Configurable	116
SSI	Software, SmartSelect Interface, motor configuration setup software	114